INTEGRATED PROGRAM SUMMARY

ANNEX C

ACQUISITION STRATEGY REPORT, (REV. 1)*

FOR

AIM-9X SIDEWINDER MISSILE

I. PROGRAM STRUCTURE

1. Program Phases. This ASR addresses development and procurement of the AIM-9X missile, which is an evolutionary upgrade to the existing Navy and Air Force inventory AIM-9M Sidewinder, a short-range missile (SRM) designed to detect and track infrared (IR) energy. The AIM-9M, fielded in 1982, is the most recent link in this evolutionary chain of upgrades to reach operational status, with the current DoD AIM-9M inventory exceeding 20,000 missiles. The Government is the AIM-9M systems design agent and integrator. The missile consists of six major subsystems, each bought separately and assembled at a Government depot: guidance control section (including an IR seeker), fuse (target detector), safe and arming device, warhead, rocket motor, and air vehicle accessories (wings and fins) (see Figure 1). The guidance and control section, based upon 1970's analog technology and a single-element seeker design, has very limited potential for further evolutionary growth. The need for a follow-on missile with improved acquisition range, improved infrared counter-countermeasures (IRCCM), and an increased off-boresight acquisition and launch capability was assessed by the Joint Requirements Oversight Council (JROC) on 13 December 1990. The JROC confirmed the need for the development of a follow-on missile to the AIM-9M. Over a twelve month period in 1992-1993 the Joint Tactical Air-to-Air Missile (JTAAM) Steering Group reviewed AIM-9X development options, placing emphasis on system affordability and shortening the overall development schedule. In the interest of reducing both AIM-9X development and production costs, the Steering Group focused significant attention upon options which not only would satisfy the JORD but could incorporate existing AIM-9M missile components, e.g. MK-36 Rocket Motor, WDU-17 Warhead, and the DSU-15A/B Fuze (target detector). After reviewing five different missile configuration options and their respective development costs and schedules, the JTAAM Steering Group on 28 January 1993 directed the AIM-9X program office to select technology for AIM-9X which would (1) satisfy the JORD, (2) utilize a number of AIM-9M components, and (3) have high potential for further evolutionary capability growth in the post FY 00 time period. The development effort will focus on a midwave IR focal plane array (IRFPA) seeker design coupled with either a Government developed Boa or Boxoffice high maneuverability missile airframe design to meet the postulated operational requirements. The development effort is planned to last seven and one fourth years (one and a half year demonstration/ validation (DEM/VAL) phase; five and three quarter years engineering and manufacturing development (EMD) phase) followed by 16+ years of production (DoD stockage objective assumed to be 10,000 missiles). From a technical risk management standpoint, only two of the current six AIM-9M missile components are being upgraded in the AIM-9X development program, the guidance and control section (GCS) and the airframe (see Figure 1, highlighted areas). The Department of Defense (DoD) is exploring the opportunity for international cooperation in future phases of the AIM-9X program. International cooperative opportunities will be pursued in parallel with the DEM/VAL effort.

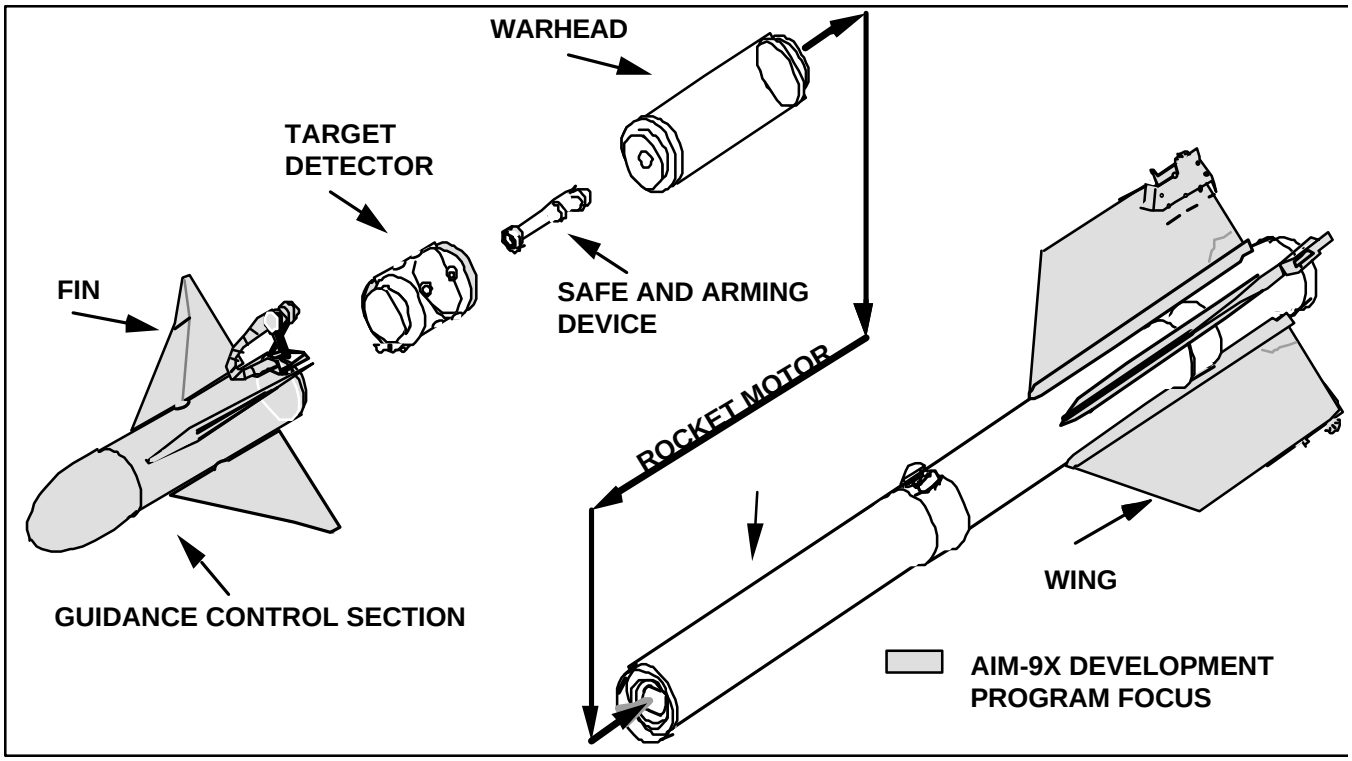

Figure 1

a. DEM/VAL (Phase I). Following a milestone (MS) IV/I review, the Government plans to award AIM-9X competitive DEM/VAL contracts to two contractors. The purpose of the AIM-9X DEM/VAL phase is to build and demonstrate competitive seeker prototypes to reduce the IRFPA imaging seeker development risks. In addition, each contractor will be required to conduct during DEM/VAL detailed AIM-9X system studies, including an all-up-round (AUR) configuration definition substantiated with a six degree of freedom digital simulation. In conducting these studies, the contractors will be required to take an integrated product design approach to ensure that their designs are producible, testable, and supportable. The contractors must also address the methods and impacts of achieving efficient production over a range of production rates. The studies will be primary references for the subsequent EMD milestone (MS) and source selection processes. The AUR is to incorporate a midwave IR imaging seeker and new missile airframe, the latter based upon either the Boa or Boxoffice advanced technology demonstration airframes. In their AUR study, the contractors will have the option to expand the study to include an alternative missile airframe; this airframe proposal, however, must be substantiated with detailed simulation and test data. Contractors will be directed to use the existing AIM-9M rocket motor (MK 36 Mod 11), warhead (WDU-17/B), and target detector (DSU-15A/B) designs during the AUR studies. The latter can be re-packaged, if required, to meet the overall missile maximum length and weight constraints. Progress will be monitored by electronic management information links with each contractor, monthly cost and schedule performance reports, monthly evaluation of technical performance parameter status, design reviews, and quarterly program status reviews. A System Design Review (SDR) will be held near the end of DEM/VAL. Government configuration control will begin upon award of the EMD contract.

(1) Demonstrations. More specifically, in DEM/VAL, the Government will review, demonstrate, and validate the contractors' seeker subsystem designs in four risk areas: gimbal platform stabilization, cryogenic cooling, signal/data processing, and detector non-uniformity compensation (NUC). Through extensive trade studies, the AIM-9X Program Manager has determined that a hardware/software demonstration of the above four sub-systems is key to ensuring technical risks are understood and mitigated by laboratory testing, target fly-overs and captive carry testing before entering EMD. In addition to the above four sub-system demonstrations, the contractors will perform the AIM-9X system studies described

above, conduct missile/aircraft interface studies and hardware interface demonstrations (MIL-Standard-1760) and build three IRFPA seeker “brassboards” with signal processing units) for use in Government laboratory, ground, and captive flight tests.

(2) Desired DEM/VAL Results. Successful demonstration of the four seeker sub-systems mentioned above is critical, followed by the contractors' AIM-9X system studies and aircraft/missile design interface studies. The prototype brassboard seekers are viewed as conceptual demonstration seeker hardware only and will not be used to objectively score the seeker performance against a pass-fail specification. The key question being addressed in the prototype brassboard hardware and software is, "Does the contractor's design approach have growth potential in EMD to meet AIM-9X missile performance specification requirements (AS-5780)?" The bottom line objective sought by the Government during DEM/VAL is a determination whether AIM-9X system risk level justifies proceeding into EMD.

b. Engineering and Manufacturing Development (EMD) (Phase II). The EMD phase will commence following MS-II approval. A single contract will be awarded to complete AUR development and testing. As required of the DEM/VAL contractors, the winning EMD contractor must utilize an integrated product design approach to ensure the AIM-9X is producible, testable and supportable. The contractor will build 22 development seekers, 20 programmed rounds for missile air vehicle maturity testing/aircraft stores separation testing, and 62 AURs. More specifically, the contractor will build seekers that perform in accordance with the Type "B" (development) specifications' allocated baseline established at an EMD preliminary design review (PDR). The contractor's integration of the selected missile airframe will also undergo extensive testing in the above mentioned programmed rounds. Additionally, if the contractor's AUR study highlighted the need for a modified/new S&A or repackaged target detector, required design work for these components will be accomplished during the first 24 months of EMD. Development missile test firings will consist of eight contractor evaluation launches, six of which will meet combined contractor and Government objectives, and 14 Government only launches planned for the design qualification phases (DT-IIC/D). There will also be 28 launches in the "User" operational assessment and test phases (OT-IIA/B).

(1) EMD Program Management. Progress will be monitored by electronic management information links with the contractor, monthly cost and schedule performance reports, monthly evaluation of technical performance parameter status, quarterly program status reviews, and frequent technical interchange meetings. A preliminary design review (PDR) will be held to establish the allocated baseline (Type "B" specifications) for the missile system shortly after contract award. Incremental critical design reviews (CDRs) will be conducted for all configuration items. Production readiness reviews (PRRs), test readiness review (TRR), and functional configuration audit (FCA) will also occur.

(2) Transition to Production. Transition to production will actually start with the use of producibility engineering and planning as part of the DEM/VAL phase integrated product development requirement, proceed during EMD through an incremental development of successively more capable AUR prototypes, and utilize a low rate initial production (LRIP) period. At the conclusion of EMD, sufficient production preparation and experience will have been gained to obtain MS-III approval for full rate production (FRP). In EMD, engineering development models (EDMs) will be used to accomplish early developmental testing and operational assessment leading to the final development configuration, production representative models (PRMs). PRMs will be the test articles for later developmental testing, technical evaluation with concurrent operational testing, and dedicated operational testing. PRMs will be manufactured to the greatest extent practical in a production environment.

(i) Low Rate Initial Production. One LRIP lot of 150 missiles will be procured to establish an initial production base for the system. This will permit an orderly increase in the system production rate toward full-rate production. LRIP quantities will be contracted for by use of Competitive Phase Pricing (CPP) as an option to the EMD contract. This strategy requires offerors for the EMD phase to propose initial targets for the LRIP option which would be subject to adjustment at the first PRR in accordance with a specified successive target formula.

The CPP strategy is appropriate because it provides for a balanced sharing of risk between the Government and the EMD contractor. This balanced sharing of risk is based on a thorough assessment of AIM-9X requirements and the existing technology in the areas of missile design and production. The DEM/VAL period will improve upon existing technology and establish the baseline for the AIM-9X seeker design which will account for 70% of the AUR cost. Therefore, a realistic cost estimate at the commencement of EMD for the LRIP option is achievable at minimum risk to the EMD offerors. No award of an LRIP contract will occur until approval to do so has been obtained at a forum and/or in a manner as directed by OSD.

(ii) Full Rate Production. MS-III will be the approval forum for exiting EMD and contracting for FRP. Full rate production contracts to deliver AIM-9X AURs will be fixed price type. See paragraph II.6.a.(3) below (Competition) for a description of the decision process for determining whether a second manufacturing source will be brought on line during the FRP phase.

(iii) The AIM-9X transition to production program will be event-based as follows:

NEXT STEP	BASED ON SATISFACTORY COMPLETION OF
LRIP long lead materials/ ST/STE	CDR/PRR
LRIP go-ahead	Technical Evaluation/Operational
FRP long lead material/ST/STE	Assessment, PRR
FRP Lot 1 go ahead	Operational Evaluation, PRR, MS-III

2. Development/Production Plan. Estimated production quantities as shown below in Table 1 are notional. These numbers will be updated prior to MS-II. As noted above, the contractors will have been required during DEM/VAL to address the methods and impacts of sustaining AUR production at a variety of production rates, including very low rates.

Acquisition Quantities

FY	95	96	97	98	99	00	01	02	03	04	05	06	07	XX
Development*		6		8	31	32	33							
LRIP								30	120					
FRP										250	600	600	600	600

* Development quantities include prototype AURs, captive test units (CTUs) seekers and programmed rounds. Production quantities are AURs only

Table 1

3. Program Milestones. Figure 2 (page 3) depicts AIM-9X acquisition milestones, test events, contract awards, deliveries/performance. The functional, allocated, and product baselines will be established and placed under Government MIL-STD-973 control after the appropriate reviews, in accordance with standard configuration management procedures.

4. Delivery and Performance Period Requirements. Delivery and performance requirements are based on the requirements of the Department of Defense (DoD) acquisition process, the Navy and Air Force needs, and experiences on other similar programs. The schedule avoids concurrence of development and production for the baseline weapon.

5. Test and Evaluation. Developmental and operational test and evaluation of the AIM-9X system will be conducted in accordance with the Test and Evaluation Master Plan (TEMP) (assigned Test Evaluation and Identification Number 1412). A live fire test (LFT) program will be planned in accordance with DODINST 5000.2 and conducted during EMD as specified in the TEMP LFT Annex.

6. Schedule for the DEM/VAL Award

ORD Approval	SEP 93
CSC Planning Meeting	SEP 93
Final COEA Report	NOV 93
Acquisition Plan (AP) Approval	MAY 94
Formal RFP Release	MAY 94
CSC Review	NOV 94
MS-IV/I	DEC 94
Source Selection/Contract Award	DEC 94

II. ACQUISITION APPROACH

1. Acquisition Strategy Overview

a. Life Cycle Acquisition. The concept of competitive development to reduce risk while enhancing the program will be used in DEM/VAL. Two contractors will be selected for the DEM/VAL phase. For EMD, one contractor will be selected, using full and open competition. The EMD contractor may be either one of the DEM/VAL contractors or a non-DEM/VAL contractor (new U.S. or a foreign prime contractor). The Government will compete production lots on an annual basis if the decision process described in paragraph II.6.a.(3) (Competition) below justifies competitive procurement of AURs. The Government will buy the appropriate amount of Special Tooling/Special Test Equipment (ST/STE) to facilitize a second contractor to assure competition in production, if production rates warrant. The contractors must also address the methods and impacts of achieving efficient production over a range of production rates.

b. Risk Reduction

(1). DEM/VAL Risk Reduction. The greatest technical challenge to the AIM-9X program is the development of an advanced seeker and its associated signal processing that will improve IRCCM, acquisition range, off-boresight field of view, acquisition of targets in clutter, and probability of kill for the Sidewinder SRM. The DEM/VAL phase will focus on risk reduction by evaluating competitive seeker prototypes. Seeker components will be prototyped and subjected to rigorous Government hardware-in-the loop (HWIL), ground flyover, and captive flight testing. The goal of DEM/VAL testing will be to increase confidence that engineering challenges associated with the four key technical risk areas (NUC, cryogenic cooling, signal processing, and gimbal/platform stabilization) are well understood and can be solved in a five inch airframe design. AIM-9X preliminary tactical SRM system design data packages will be developed, and the contractors will be required to show data that validates their system designs and demonstrate an acceptable level of risk for proceeding into EMD. In DEM/VAL, the contractors will be required to take an integrated product design approach to ensure that their designs are producible, testable, and supportable. These comprehensive design studies will be primary references for the subsequent EMD milestone and source selection processes. System software requirements definition and preliminary design will be initiated and subjected to Government testing. Software risk will be mitigated by providing the contractors with AIM-9R visible spectrum signal processing algorithms for use as reference in developing similar IR spectrum algorithms. Contractors will be instructed to include in their proposals risk identification and management plans. The Government and the winning contractors will prepare risk management plans. These will be updated as the program proceeds. Utilizing DoD 4245.7-M, Defense Systems Management College (DSMC) Risk Management Guide, and NAVSO P6071 ("Best Practices") as guides, the programmatic, technical performance, cost, schedule, producibility, testability, and supportability risks will be identified and the appropriate methods for handling them determined.

(2). EMD Risk Reduction. An incremental development process is planned that will allow the AUR design to be gradually matured over several successive prototype configurations before LRIP begins. EDMs and PRMs will be configured and tested to build confidence in the reliability, producibility, testability, supportability, and lethality of the system. Use to the extent practical of non-developmental items (including existing AIM-9 components) will be encouraged.

c. Preplanned Product Improvement (P3I). Since all JORD requirements are expected to be satisfied by the initial AUR, no P3I effort is foreseen at this time.

d. Design-To-Cost (DTC)/Cost Reduction Management. The Government is pursuing an aggressive program for obtaining the lowest cost missile in production. This program will include a competitive, two-contractor DEM/VAL effort, full and open competition at the EMD phase (MSII) including foreign contractor participation, and use of competitive priced options for the LRIP quantities. In DEM/VAL, the two-contractor competitive acquisition strategy along with the strategy of full and open competition for the EMD award will keep development cost under control. The Average Unit Production Cost (AUPC) goals proposed for the EMD contract will be used to establish the fee incentive in the contract.

During DEM/VAL, the contractors will conduct engineering trade studies, select the most promising engineering design solutions, and propose an all-up-round missile design to include missile interface definition between the launcher and aircraft. These trade studies will be documented from a cost standpoint in a formal Design-to-Cost (DTC) Report and status tracked quarterly at program management reviews. The contractors will also be required to plan and document an effective engineering-oriented cost control analysis in accordance with MIL-STD-337. In the DEM/VAL proposals, the contractors will propose DTC estimates representative of the AUPC for the AIM-9X all-up-round (AUR) missile, which will be evaluated in the competition. The contractors will also be required to integrate their DTC goals into the overall development program. The DTC goals will also be an integral part of the contractor's Producibility Report that is a deliverable at the end of DEM/VAL. Additionally, the DEM/VAL RFP requires prospective contractors to establish Integrated Product Development Teams (IPDT). These integrated teams will manage subsystem development efforts and other missile development disciplines e.g., flight testing, to meet not only operational performance requirements but also cost goals (flowed down from the all-up-round missile's DTC cost targets noted below), schedule constraints, etc. We envision these subsystem cost goals to be documented in the contractor's Integrated Master Plan before commencement of EMD. This IPDT approach will ensure that comprehensive attention is paid to cost associated with the entire life cycle, from development, through production, sustainment, and disposal.

In EMD, contractors will be required to establish DTC goals (AUPC) in their respective proposals for not only development missiles, but also for the Low Rate Initial Production (LRIP) quantities. The proposal DTC goals, converted to contract cost targets, will be reported on quarterly by the contractor. Specifically, the envisioned contract will include AUPC targets for the forty-three (43) production representative missiles (PRMs), the low rate initial production (LRIP) quantity, and also a projection for the entire 10,000 missile production program. The performance of the EMD contractor towards achieving his AUPC targets for the PRMs and LRIP quantities will be incentivized in the EMD contract fee structure. If the contractor can meet his PRM and LRIP AUPC targets, the government will then have confidence in the contractor meeting his outyear production cost projections.

In order to maintain a downward pressure in the missile unit cost during production, the Government will consider establishing a second production source (competitively selected) if annual quantity requirements warrant this action (See ASR, Section II, Paragraph 6. Competition).

2. Government /Contractor Responsibilities.

a. Management. The Government management team will be under the leadership of the Navy's Program Executive Officer for Tactical Aircraft Programs (PEO(T)), with direct program management responsibility assigned to the Air-To-Air Missile Systems Program Manager (PMA-259), which includes the Joint SRM Program. This is a joint program with the Navy as executive service and the Air Force as the participating service. The Naval Air Systems Command will perform contracting, budgeting, legal, logistics, and technical management efforts. Additionally, Naval Air Warfare Center (NAWC), Air Force Material Command (AFMC)-Aeronautical Systems Center (ASC), and other Government agencies will provide the Joint SRM Program Office with technical assistance in systems engineering, design analysis, verification and validation testing of contractor products, integrated logistics support, survivability, software management, and aircraft integration. The contractor will design, develop, manufacture and test components and missiles. Required tooling and test equipment will also be manufactured by the contractor.

The contractor will perform technical and administrative planning, organizing, directing, coordinating, and controlling actions necessary to accomplish the overall system program objectives. The contractor will assume Total System Performance Responsibility (TSPR) for the new AUR and maintain configuration control until the appropriate Government reviews. Monitoring of each contractor's production is accomplished by a series of Government Management Information reports. This includes appropriate Cost Performance Reports (CPR) in accordance with the CSCSC system, which are submitted by the contractor in accordance with DoD instructions and the CDRL. Monthly progress reports and periodic business and technical reviews by AIM-9X program management officials are supplemented by daily contacts between the contractor and the Defense Plant Representative office (DPRO) at each contractor's facility. Periodic Government audits will review each contractor's internal controls. To aid daily management of the AIM-9X program, the PMA will use a network of personal computers within the PMA and the matrix, that are integrated with the prime and associate contractors' management systems, to electronically communicate, gather, analyze and report information relative to the program schedule, cost and technical progress.

b. Weapon Platform Integration. During DEM/VAL, the contractors will be tasked to conduct interoperability studies to ensure that the AIM-9X can be supported by the weapon platforms on which it will be required to operate. During DEM/VAL and EMD, the contractors will interface with the aircraft prime contractors through associate contractor agreements to coordinate compatibility between the weapon and aircraft. Integration of AIM-9X controls and displays into the host platform will be accomplished through separate contracts with the aircraft prime contractors under the cognizance of the aircraft platform program offices. The Joint SRM Program Office will develop memoranda of understanding (MOU) with PEO(T) and Air Force weapon platform program offices to delineate specific responsibilities. Only the F/A-18 will be utilized for DEM/VAL test and evaluation. The AIM-9X ORD requires compatibility with existing and planned attack/fighter aircraft. As a result, DEM/VAL contractors will be required to conduct trade studies to ensure that the AIM-9X can be integrated on the F-14, F-15, F-16 and F-22 aircraft per the AIM-9X system specification. During EMD, the AIM-9X will be integrated on the F/A-18 and the F-15, and during Follow-on Test and Evaluation (FOT&E) (post MS-III), the AIM-9X will be integrated on the F-14, F-16 and F-22 platforms.

c. Government Furnished Property (GFP). GFP for DEM/VAL will consist of test range assets and equipment to include: encryption devices, aircraft, telemetry modules, aerial targets, use of ranges, and existing AIM-9M relevant support equipment required to test the AIM-9X total system. GFP for EMD will include items similar to those provided in DEM/VAL as well as any AIM-9M components to be incorporated in the AUR design. The contractors will be required to accept the demonstrated performance of the GFP components, and assume TSPR for the new AUR.

d. Government Furnished Information. Technical data furnished by the Government will consist of the statement of work and applicable specifications, applicable aircraft interface control documents, AIM-9M performance and system specifications. In addition, AIM-9R signal processing algorithms will be provided as information only for use as reference in developing similar IR algorithms, Boa and Boxoffice design and performance data, and relevant GFP information.

3. Computer-Aided Acquisition and Logistics Support (CALS). The AIM-9X program will comply with MIL-STD-1840A. To the maximum extent practical, engineering and logistics data deliverables will be provided via electronic media. The contractors will be required to maintain relevant engineering and logistics data and certain program management information on databases that can be shared with Government engineering activities. An electronic management information link will be maintained with the contractors.

4. Streamlining. Several streamlining initiatives have been undertaken for the program. A draft of the DEM/VAL statement of work and specifications were released for contractor review and comment, followed later by release of a draft request for proposal (RFP). The formal DEM/VAL RFP will be released following ASR approval and responses to it evaluated prior to MS IV/I. Contracts will be awarded upon milestone approval. During DEM/VAL, the following initiatives will be implemented: user influence on design by continuous coordination among the program manager, the development contractors, and the projected user representatives; an integrated product design approach to ensure that contractors'

designs are producible, testable, and supportable; and emphasis on total quality management principles by both the Government and contractor. In accordance with the principles of acquisition streamlining, as specified in DoD Instruction 5000.2, RFPs will require the contractors to submit streamlining recommendations. Contractors will define any associated technical, cost, or schedule streamlining opportunities and quantify the potential cost savings to the Government as a result of such streamlining. During the competitive DEM/VAL phase, the Government team will establish a system of "checks and balances" to prevent the possibility of technical leveling between DEM/VAL contractors. This system will include administrative guidelines for the Government team leaders to have had Contracting Officer's Representative (COR) training. Likewise, an appropriate level of periodic reminders of the guidelines will be provided to the team for Technical Working Groups, milestone reviews, and monitoring activities. Access to the contractors' databases through CALS will be limited to those persons with a need-to-know. No direction will be given to competing contractors without the PCO's knowledge and approval.

5. Sources

a. Solicitation of Sources. Seven potential contractors responded to a “sources sought” synopsis issued on 30 April 1993. A full and open competitive solicitation will be issued for DEM/VAL. Offerors' proposals will be evaluated on the basis of best value to the Government, taking into account each contractor's demonstrated capability to meet the performance requirements. Planned evaluation criteria are technical merit, design approach, total cost, integrated logistics support, past performance, and management (including schedule). Prime contractors for the AIM-9X program must meet Top Secret-No Foreign Nationals security requirements or receive an exception from the National Disclosure Policy Committee (NDPC). The acquisition strategy makes no assumptions about where the best technology for the missile will be found. It excludes neither drawing upon foreign technology sources nor utilizing the results of foreign SRM developments.

b. International Participation. During DEM/VAL, DoD will pursue international cooperative development initiatives for execution during EMD and Production. The United States Government (USG) is formally committed to undertake a structured process to permit a fair and thorough assessment of options for foreign participation in the EMD and Production phases of the AIM-9X program. The assessment process for foreign participation will be accomplished in parallel with the US-led DEM/VAL phase. The objective of this parallel effort will be to develop sufficient cost, schedule, technical, and performance information about additional foreign participation options to permit the USG to evaluate these options based on criteria similar to those used to evaluate the DEM/VAL participants. The schedule of this parallel effort will coincide with that of the DEM/VAL so that the necessary information is available to permit the USG to evaluate the foreign participation options and the US DEM/VAL participants at the same time at the conclusion of the DEM/VAL. Subject to the National Disclosure Policy Committee (NDPC) process relating to sharing of classified information with non-US governments and firms, the USG will make available to qualified foreign governments and firms necessary information so that the foreign entities may provide sufficient technical, cost, schedule, and performance information about their proposed AIM-9X options so that the USG may adequately and fairly assess these options at the conclusion of the DEM/VAL phase. Release of the AIM-9X operational requirements document to foreign governments will be reviewed by the NDPC on a country by country basis. To obtain sufficient information through this parallel assessment process, the USG will use the Foreign Comparative Test (FCT) program, already ongoing demonstrations, and/or other appropriate trials, to evaluate the technical and performance capabilities of any qualified foreign missiles, components, helmet mounted sight/display which are sufficiently mature to be options for the AIM-9X program. Planning for using the FCT, and/or ongoing demonstration, and/or other trials will begin without delay.

(1) Foreign Options. Any decision to enter into an international agreement with another country will be based on a mutual operational requirement, shared development costs, and possibly foreign company participation that resulted from the AIM-9X DEM/VAL phase. US and foreign industry would play heavily in determining the resulting development workshare. There exist several alternatives for foreign cooperation including: A) AIM-9X DEM/VAL primes seeking foreign subcontractors to ensure the optimum technology at the lowest cost to meet the US AIM-9X requirements. B) US/foreign government bi-lateral involvement in the US-led AIM-9X program beginning with the Engineering and Manufacturing

Development (EMD) phase and involving a production share agreement. This may be facilitated by the first alternative. C) US/foreign government bi-lateral involvement in a development program to be led by another country and including a production share agreement. This may include an ongoing program (e.g. ASRAAM with modifications to meet a joint requirement). D) US procurement of an existing/fielded missile (assuming a reduction in the U.S. requirement is judged to be operationally acceptable).

c. Subcontracting Plans. The AIM-9X DEM/VAL and EMD RFPs will require contractors to submit subcontracting plans describing how they intend to manage subcontractors and subcontracted critical items. Small businesses will be used to the maximum extent practical by prime contractors during all phases of the program. Five percent will be the goal for small disadvantaged business utilization.

d. Surge Mobilization Objectives/Industrial Preparedness Strategy. The surge objective is two (2) times the peacetime production rate in a six (6) month period, and the mobilization objective is four (4) times rate in an eighteen (18) month period. To achieve these objectives the EMD contractor will be tasked, as part of the EMD contract, to address the following elements to support the Industrial Base Program as outlined in DoD 5000.1 and 5000.2-M. Items to be covered are: (1) Production capability to surge/mobilize to specified rates. (2) Possible constraints to production acceleration such as ST/STE, facilities requirements, etc. (3) Subcontractor, vendor, and supplier capabilities and actions that would be taken by the prime contractor to provide alternatives to sole/single source procurement. (4) Actions that would be taken by the prime contractor(s) to avoid foreign source dependencies (except as approved by the Government) in materials, assembly, and/or fabrication of parts and/or components. The Industrial Base Program will be conducted in accordance with DoD directive 4005.1.

e. Defense Industrial Base Development. The design requirements for the AIM-9X will be reviewed carefully to ensure that the U.S industrial base can sustain uninterrupted operation, maintenance, and repair capability during production and post production support. The system concept will emphasize early logistics influence to ensure a modular and supportable design that can accommodate parts obsolescence and industrial base issues.

(1) Domestic Source Issues. The Industrial Base Assessment (IBA) (dated 5 May 1993) identifies one potential industrial base issue related to the AIM-9X development. Magnesium Fluoride (MgF2) is a polycrystalline powder used in the manufacture of optical seeker domes on the AIM-9M and is a potential candidate for the AIM-9X dome material. Currently, there is only one qualified manufacturer of MgF2 to the specifications required for the AIM-9M dome material, Mallinckrodt Company of St. Louis, MO. Mallinckrodt has given notice that they are discontinuing production of the MgF2 powder pressed billets. A life-of-type buy is being considered to address this issue for the AIM-9M system. During DEM/VAL, trade studies will be conducted to determine a material which best meets the AIM-9X seeker dome requirements. Among dome material candidates which may be considered are MgF2, sapphire, spinel, yttrium, and alon. If MgF2 is selected by a DEM/VAL contractor, or proposed by an EMD contractor, that contractor's EMD proposal must include a plan for making an uninterrupted flow of MgF2 available at a level required to support production.

(2) Foreign Sources Issues. The IBA notes a foreign dependency on titanium used for the rod in the AIM-9M warhead. This same warhead will continue to be used in the AIM-9X configuration. Since existing AIM-9M warheads will be used in the AIM-9X, a materials availability problem is not anticipated. The AIM-9X seeker will likely use digital circuitry from foreign suppliers at the subtier level. The winning contractors will be required to present a plan to assure an uninterrupted flow of required materials.

f. Competitive Prototypes. Competitive prototyping of two different seeker concepts will be accomplished during DEM/VAL. The competing contractors will build prototype seekers, conduct systems tests, and provide support during Government testing. The seekers will be evaluated in side-by-side ground testing against fly-over targets and captive carry tests that will be conducted under equivalent test conditions to provide comparable data for evaluation. A preliminary tactical SRM data package will be developed, and the contractors will be required to show data that validates their seeker design and demonstrates an acceptable level of risk that will ensure successful completion of AIM-9X development during EMD.

6. Competition

a. Competition Strategy

(1). DEM/VAL. For DEM/VAL the Government will utilize full and open competition to select two contractors from sources who meet security requirements of the DEM/VAL RFP to develop competitive seeker prototypes and an AIM-9X preliminary tactical SRM system data package.

(2) EMD. For EMD, the Government will utilize full and open competition. All sources must meet the security requirements of the EMD RFP. Access to the EMD RFP by foreign firms will require approval by the NDPC. In order to foster competition for EMD, the USG also will conduct a market survey among domestic and foreign firms early in the DEM/VAL period to identify firms interested in competing for the EMD award. Firms identified during the market survey which have met the EMD security requirements will be permitted access to the EMD RFP and related documentation in the same manner as the DEM/VAL contractors. To support their AUR design proposals, non-DEM/VAL sources who respond to the EMD RFP must provide data and show accomplishment of a test program comparable to like items being delivered by the DEM/VAL contractors. (Comparable data requirements will be succinctly identified in the EMD RFP.)

(3). Production. If total planned inventory requirements and related economic considerations justify the investment, the Government will facilitize a second contractor (to be competitively selected) after the production baseline has been established. Continuing analysis during EMD will be focused upon facilitating the production competition decision. This analysis will pay particular attention to whether or not, given the likely AIM-9X business base, two independent producers can deliver quality products at an affordable price to the Government and whether the Government can recover the cost of developing a second source. Should dual-source production not be deemed cost-effective, FRP lots will continue to be procured from the EMD contractor. In order to foster a solid industrial base, the winning EMD contractor will be required to submit a subcontract management plan which will identify how competition can be obtained at the subcontractor level.

b. Data Rights. The Government currently maintains unlimited rights to production level drawings and data packages for the Sidewinder AIM-9M missile. Proposed changes to these data packages will be managed in accordance with the guidelines of SECNAVINST 4210.9 and acquired and maintained in accordance with MIL-T-31000 and MIL-STD-973. For newly developed items, the Government plans to acquire data sufficient to maintain the option of competition in production. As part of the DEM/VAL RFP, contractors will be asked to provide a data management plan showing how they will manage data, proprietary rights, and patent considerations. Each contractor's proposal will be reviewed for statements regarding data rights. In all phases, the Government will use best efforts to acquire unlimited rights to the technical data necessary to ensure maintaining an option for competition in production. Rights in Technical Data and Computer Software, DoD FAR Supplement 252.227-7013, as well as deferred ordering of technical data and computer software in accordance with DFAR 252.227-7027 are applicable to the DEM/VAL and EMD contracts.

c. Component Breakout Analysis. Component breakout is not planned during DEM/VAL or EMD. After transition to production, detailed component breakout reviews will be conducted in accordance with DFAR paragraph 217.7300. The full design disclosure goal will support any potential component breakout.

7. Contract Types. DEM/VAL and EMD contracts will be of a multiple incentive type, using a Cost Plus Incentive Fee (CPIF) contract as the base contract, including incentives for cost control and schedule control. LRIP will be contracted by use of a competitive phased pricing approach. Full rate production contracts will be firm fixed price. Table 2 below summarizes these contracting strategies.

Contract Types

PROGRAM PHASE	CONTRACT TYPE	COMPETITION
DEM/VAL	CPIF (IF FOR COST AND SCHEDULE)	FULL AND OPEN TOP SECRET NOFORN SECURITY CLEARANCE OR NDPC EXCEPTION REQUIRED
EMD	CPIF (IF FOR COST AND SCHEDULE)	FULL AND OPEN TOP SECRET NOFORN SECURITY CLEARANCE OR NDPC EXCEPTION REQUIRED
LRIP	CPP	SOLE SOURCE TO EMD CONTRACTOR
FRP	FFP	COMPETITIVE OR SOLE SOURCE TO EMD CONTRACTOR

Table 2

8. Contract Incentives. The contractors will be incentivized for cost and schedule performance during DEM/VAL, EMD, and LRIP. No incentives are planned for FRP.

9. Fixed Price Contracts. Fixed priced contracts will only be used for FRP lots.

III. MAJOR TRADE-OFFS

Trade Off Decisions. To date, no major trade-offs have been identified. The COEA is now complete and no trade-offs have been identified for either the milestone decision authority or the source selection authority.

BOA/BOX OFFICE DESCRIPTION

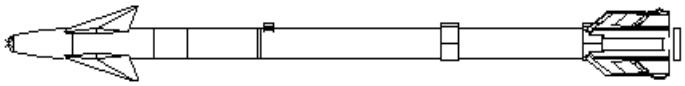

- **BOA AIRFRAME DESCRIPTION:**

  - **ELECTRO-MECHANICAL SERVO CANARD CONTROLLED**
  - **INVESTMENT: $5.1M**
  - **TIME: 1988- PRESENT, NAWC-CL DESIGN AGENT**
  - **STATUS: 6 SUCCESSFUL FIRINGS (5 ON SLED, 1 FROM F-4)**

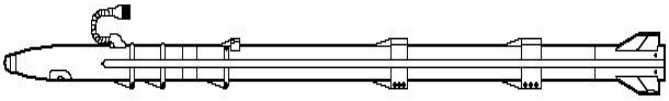

- **BOXOFFICE AIRFRAME DESCRIPTION:**

  - **ELECTRIC FOUR AXIS TAIL CONTROL**
  - **INVESTMENT: $12+M**
  - **TIME: 1988-PRESENT, AF EGLIN (RAYTHEON) DESIGN AGENT**
  - **STATUS: 9 SHOTS COMPLETED ON F-16 AIRCRAFT TO DATE**

***** Airframe development efforts were not funded by the AIM-9X program office

Figure 3

Level-1 AIRCRAFT SYSTEM

Level-2 AIR VEHICLE

Level-3
- Airframe
- Air Vehicle Applications Software
- Air Vehicle System Software
- Communications/Identification
- Navigation/Guidance
- Central Computer
- Data Display & Controls
- Fire Control
- Survivability
- Reconnaissance
- Automatic Flight Control
- Antisubmarine Warfare
- Central Integrated Checkout
- Armament
- Weapons Delivery
- Auxiliary Equipment

Level-1 SHIP SYSTEM

Level-2 SHIP

Level-3
- Hull Structure
- Propulsion Plant
- Electric Plant
- Command & Surveillance
- Auxiliary Systems
- Outfit & Furnishings
- Armament
- Integration/Engineering
- Ship Assembly & Support Svcs

COMMON ELEMENTS APPLICABLE TO ALL CATEGORIES

Level-2 PECULIAR SUPPORT EQUIP

Level-3
- Test & Measurement Equip
- Support & Handling Equip

COMMON SUPPORT EQUIP
- Test & Measurement Equip
- Support & Handling Equip

Level-2 SYSTEM TEST & EVAL

Level-3
- Development Test & Eval
- Operational Test & Eval
- Test & Eval Support
- Mock-Ups
- Test Facilities

SYSTEMS ENGINEERING/ PROJECT MANAGEMENT

Level-2 OPERATION/SITE ACTIVATION

Level-3
- Site Construction
- Conversion/System Assembly, Installation & Checkout
- Site/Ship/Vehicle Conversion
- Contractor Technical Support

INDUSTRIAL FACILITIES
- Expansion
- Equipment Acquisition
- Modernization
- Maintenance (Indus Fac)

Level-2 TRAINING

Level-3
- Equipment
- Services
- Facilities

DATA
- Technical Pubs
- Engineering Data
- Management Data

Level-1 ELECTRIC/AUTO SOFTWARE SYS		
Level-2 PRIME MISSION PRODUCT (PMP)		PLATFORM INTEGRATION
Level-3	Subsystem 1.... n (Specify name)	
	PMP Applications Software	
	PMP System Software	
	Integration & Assembly	
Level-1 MISSILE SYSTEM		
Level-2 AIR VEHICLE		COMMAND & LAUNCH
Level-3	Integration, Assy, Test & Checkout	Surveillance, Identification and
	Propulsion (Stages 1...n as req'd)	Tracking Sensors
	Payload	Launch & Guidance Control
	Airframe	Communications
	Reentry System	Command & Launch Applications Software
	Post Boost System	Command & Launch System Software
	Guidance & Control	Launcher Equipment
	Airborne Test Equipment	Auxiliary Equipment
	Airborne Training Equipment	
	Airborne Test Equipment	
	Auxiliary Equipment	
Level-1 ORDNANCE SYSTEMS		
Level-2 LAUNCH SYSTEM		COMPLETE ROUND
Level-3	Integration, Assy, Test & Checkout	Integration, Assy, Test & Checkout
	Launcher	Structure
	Carriage	Payload
	Fire Control	Fuze
	Ready Magazine	Safety/Arm
	Adapter Kits	Guidance & Control
		Propulsion

Level-1 SPACE SYSTEM

Level-2 SPACE VEHICLE	LAUNCH VEHICLE
Level-3 Integration, Assy, Test & Check	Integration, Assy, Test & Checkout
Spacecraft	Stage I
Payload	Stage II (1...n as req'd)
Re-entry Vehicle	Strap-On Units
Orbit Injection/Dispenser	Guidance & Control

Level-1 SURFACE VEHICLE SYSTEM

Level-2 SPACE VEHICLE		SECONDARY VEHICLE
Level-3 Integration, Assy, Test & Checkout	(continued)	(same as primary vehicle)
Hull/Frame	Body/Cab	
Suspension/Steering	Automatic Loading	
Power Package/Drive train	Automatic/Remote Piloting	
Auxiliary Automotive	Nuclear, Biological, Chemical	
Turret Assembly	Special Equipment	
Fire Control	Navigation	
Armament	Communications	