U.S. Department of Transportation
Federal Aviation Administration

General Aviation Airworthiness Alerts

AC No. 43-16

ALERTS

ALERT NO. 235
FEBRUARY 1998

Improve Reliability-Interchange Service Experience

CONTENTS

AIRPLANE

AEROSPATIALE 1
BEECH 2
BELLANCA 5
CESSNA 5
PIPER 8

HELICOPTERS

McDONNELL DOUGLAS 10
ROBINSON 11
SCHWEIZER 11

AMATEUR, EXPERIMENTAL, AND SPORT AIRCRAFT

KITFOX 12
MINI-MAX 12
VAN'S 13

PROPELLERS AND POWERPLANTS

TELEDYNE CONTINENTAL 13

ACCESSORIES

CHAMPION OIL FILTER 13
FUEL AND OIL DRAIN VALVES 14
RUBBER HOSE ASSEMBLIES 15
SEATBELT AND SHOULDER HARNESS DETERIORATION 15

AIR NOTES

MAINTENANCE AND INSPECTIONS 15
AIRSPEED INDICATOR TESTING 16
AIRWORTHINESS DIRECTIVES (AD'S) ISSUED IN DECEMBER 1997 17
ALERTS ONLINE 18
ELECTRONIC AVAILABILITY OF INFORMATION 19
SUSPECTED UNAPPROVED PARTS SEMINAR 19
FAA FORM 8010-4, MALFUNCTION OR DEFECT REPORT 20
SUBSCRIPTION REQUEST FORM 20

Contents of this publication are informational only. Due to the need for extensive distribution of this publication, only one copy is provided to an addressee; however, this publication may be duplicated.

U.S. DEPARTMENT OF TRANSPORTATION
FEDERAL AVIATION ADMINISTRATION
WASHINGTON, DC 20590

GENERAL AVIATION AIRWORTHINESS ALERTS

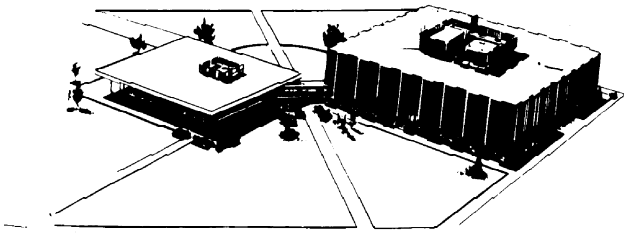

FLIGHT STANDARDS SERVICE
Mike Monroney Aeronautical Center

The General Aviation Airworthiness Alerts provide a common communication channel through which the aviation community can economically interchange service experience and thereby cooperate in the improvement of aeronautical product durability, reliability, and safety. This publication is prepared from information submitted by those of you who operate and maintain civil aeronautical products. The contents include items that have been reported as significant, but which have not been evaluated fully by the time the material went to press. As additional facts such as cause and corrective action are identified, the data will be published in subsequent issues of the Alerts. This procedure gives Alerts' readers prompt notice of conditions reported via Malfunction or Defect Reports. Your comments and suggestions for improvement are always welcome. Send to: FAA; ATTN: Designee Standardization Branch (AFS-640); P.O. Box 25082; Oklahoma City, OK 73125-5029.

AIRPLANE

AEROSPATIALE

Aerospatiale Models CM 170 and CM 175

Possible Safety Defects

The FAA received a letter from Aerospatiale, dated August 14, 1997, stating that several of these aircraft are being operated in North America by private civil operators.

The letter also stated that these aircraft were "designed as military trainers." These models were manufactured for various military organizations and were never type certificated or intended for civil use. "Investigations have revealed the possible existence of serious deficiencies which the manufacturer feels are incompatible with the safety standards generally assigned to the operation of civil aircraft." These aircraft were operated and maintained by various air forces for their specific purposes. There is very little data available concerning time before overhaul (TBO), maintenance procedures, inspection status, life limits, cycles, flight time, and maintenance records. "On the American continent, there is no Aerospatiale repair and maintenance workshop entitled to perform any work on CM 170 and CM 175 aircraft."

If you own one of these aircraft or may be considering purchasing one, it would be advisable to consult an Airworthiness Inspector at your local FAA Flight Standards District Office (FSDO). For questions concerning type certification, the FAA Aircraft Manufacturing District Office (MIDO) should be able to provide assistance.

Aerospatiale
Model TBM 700
Socata

Wing Flap Bearing Carriage Cracks
5753

During a scheduled inspection and compliance with Airworthiness Directives and Service Bulletin (SB) 70-048-57, it was found that all four wing flap bearing carriages were cracked.

The cracks were not located in the inspection areas indicated in SB 70-048-57. The cracks were located in the web area of the carriages (P/N's T700-A57-55-060-000, -001, and T700-A57-55-063-100, -101).

The submitter did not offer a cause or cure for this type of defect. You are encouraged to report any similar defects that may be found.

Part total time-790 hours.

BEECH

Beech
Model A-36
Bonanza

Engine Failure
2810

The pilot reported experiencing a sudden and complete loss of engine power. A safe off-airport landing was made.

The fuel system had been selected to the right fuel tank prior to the engine failure. A review of the aircraft's records indicated that twice in the previous year a similar engine power loss had occurred. An investigation disclosed that the right fuel tank vent was blocked with what appeared to be debris from an insect nest. Also, the two previous occurrences were caused by debris from an insect nest.

The submitter recommended frequent and detailed testing and inspection of the fuel tank vent systems.

Aircraft total time-2,600 hours.

Beech
Model E-55
Baron

Erroneous Lift Detector Indication
3100

The aircraft landed in wet snow. While the pilot taxied to the parking ramp, additional snow accumulated on the aircraft, and the stall warning horn began to sound. The stall warning horn was silenced by pulling the circuit breaker.

Maintenance personnel investigated and found the lift detector (P/N 151-3) was shorted internally. The system functioned normally after external heat was applied to the lift detector to remove moisture.

The submitter recommended that the manufacturer provide a sealed microswitch for installation in the lift detector system in order to avoid false stall indications.

Part total time-219 hours.

Beech
Model 58
Baron

Elevator Vibrations
2730

The flightcrew reported that after takeoff, a severe elevator vibration was experienced. The aircraft was returned to the departure airport, and a safe landing was made.

The report stated that during the vibration, the flight control yoke moved approximately .25 inch fore and aft. While inspecting the elevator control system, the cable tension was found to be less than the specified minimum limit. After adjusting the cable tension to within the manufacturer's specifications, a flight test proved the system was functioning properly.

Part total time not reported.

Beech
Model 58
Baron

Defective Engine Starter Wiring
2435

The pilot reported that the starter would not turn the engine.

Maintenance personnel determined there was a high amperage draw when the starter relay was engaged. Further investigation revealed the starter wire was chafed and had shorted against an engine mount.

The submitter recommended that the starter wires should be inspected for security and proper routing at every opportunity.

Aircraft total time-382 hours.

Beech	**Hydraulic Pump**
Model 65	**Adapter Failure**
Queen Air	**2913**

During a scheduled inspection, the right engine hydraulic pump adapter was found cracked.

The crack was discovered while the source of an engine oil leak was being investigated. The adapter is secured to the engine accessory section by four bolts which pass through the adapter flange. The submitter's organization operates a fleet of 17 like aircraft. The submitter stated that this defect is common, and that approximately eight similar failures occur each year. The crack may occur at any of the four attachment points. (Refer to the following illustration.)

The submitter speculated the adapter flange should be "beefed up" to alleviate this problem.

Part total time-237 hours.

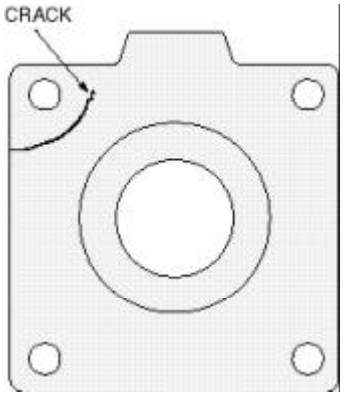

Beech	**Defective Engine**
Model BE-76	**Mount**
Duchess	**7120**

While a defective left engine mount was being replaced, the new mount (P/N 105-910010-77) was found defective.

The new mount was ordered from Kosola and Associates, Inc. Two of the weld joints were defective. The gusset plates on both upper brace arms were only tack welded to the brace arms. The submitter contacted the manufacturer. The manufacturer agreed the welds were not correct.

It is suggested that all owners of like aircraft, who have replaced engine mounts with parts from this manufacturer, should have the installation inspected for gaps under the gusset plates. (Refer to the following illustration.)

Part total time-0 hours.

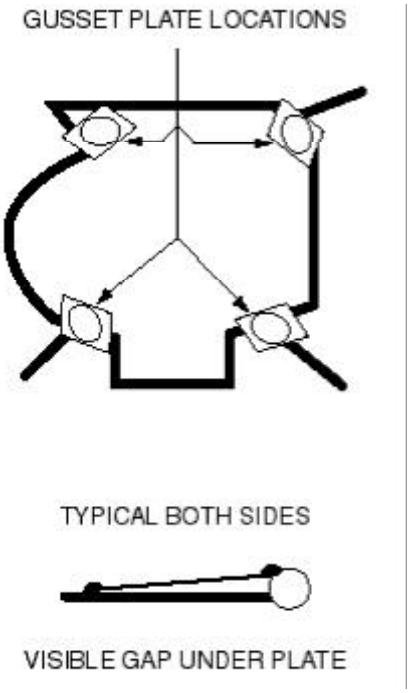

Beech Model BE-76 Duchess — **Cabin Heater Malfunction 2140**

The aircraft was brought to the maintenance hangar with a report that the cabin heater had overheated and shut down during ground operation.

An operational test of the cabin heat system disclosed that the system would not shut down using the temperature control switch. An investigation revealed that the fuel supply solenoid (P/N 83D51-2) would not close, the overtemperature sensor opened the circuit, and the system was shut down. When the fuel supply solenoid was removed and disassembled, "black sealant" material was found inside the case. This failure could have resulted in a catastrophic aircraft fire and deserves immediate attention when discovered.

Part total time-120 hours.

Beech Model B-100 King Air — **In Flight Engine Failure 6120**

The flightcrew reported that the right engine flamed out and the propeller went to the "feathered" position during flight.
A single-engine landing was made without incident. This aircraft was equipped with Garrett Model TPE 331-6 engines and Hartzell Model HC-B4TN propellers.

During an inspection, it was found that the propeller governor control arm had fallen off of the splined shaft of the governor (P/N 8210260). The attachment bolt was still secure in the control arm. This was the second similar failure experienced by this submitter. The control arm was not safetied on this occurrence; however, the control arm was safetied on the previous failure.

It was suggested that this area be given rigorous attention during scheduled inspections. Inspections should include physically checking the installation security and proper bolt torque.

Part time since overhaul-293 hours.

Beech Model B200C King Air — **Oxygen System Plumbing Defects 3500**

During a scheduled inspection, defects were found in the oxygen system plumbing.

A plumbing "B-nut" located at the aft bulkhead was found cracked in three places. Another "B-nut" at a "T-fitting" attachment was cracked in two places. (Refer to the following illustration.) These defective "B-nuts" were attached to an oxygen system tube (P/N 101-560140-1). Although the submitter did not offer a cause for these discrepancies, it is likely that overtorque and/or possible vibration played a key role in this failure.

Part total time-6,533 hours.

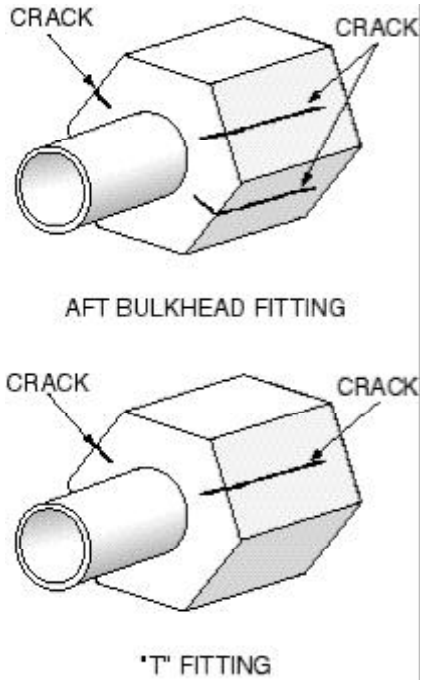

Beech Model 400 Beechjet	**Smoke In The Cockpit 5610**

The flightcrew reported experiencing smoke in the cockpit. The smoke was not severe or long lasting and was eliminated using the air-conditioning vent system.

An inspection of the system disclosed that the left windshield (P/N 45AS31001-013) heat ground strap was loose. The windshield had been marked by electrical arcing and required replacement along with the windshield heat control box. This damage was attributed to the loose ground strap.

The ground strap should be checked for security during scheduled inspections and maintenance.

Part total time-315 hours.

BELLANCA

Bellanca Model 7-GCBC Citabria	**Electrical System Failure 2400**

During an accident investigation, it was determined that the engine failed due to a defect in the aircraft's electrical system.

The wire running from the master switch to the overvoltage relay displayed evidence of severe overheating (it was burned). The overvoltage relay was located on the upper right side of the firewall. The extreme temperature melted the wire's insulation and that of adjacent wiring, which included the "P-lead" wires located in the same wire bundle. Both of the magnetos were shorted, and caused the engine to cease operation. The master switch wire does not have circuit protection. The cause of this defect could not be determined.

The submitter suggested that the manufacturer should modify the aircraft's electrical system to include circuit protection in the subject wire.

Part total time not reported.

CESSNA

Cessna Model 172 Skyhawk	**Foreign Object Damage (FOD) 2710**

During a scheduled inspection, the right aileron cable was found damaged.

The cable was frayed and mangled. It appeared that "something" came between the cable and the pulley. After further inspection, a round file was found around the cable area. The round file was approximately .1875 inch in diameter. The damaged cable and the pulley were located under the floor, just aft of the door, on the right side of the aircraft. (Refer to the following illustration.)

Once again, this case gives credence to the practice of conducting a "tool inventory" after completing every job!

Aircraft total time-471 hours.

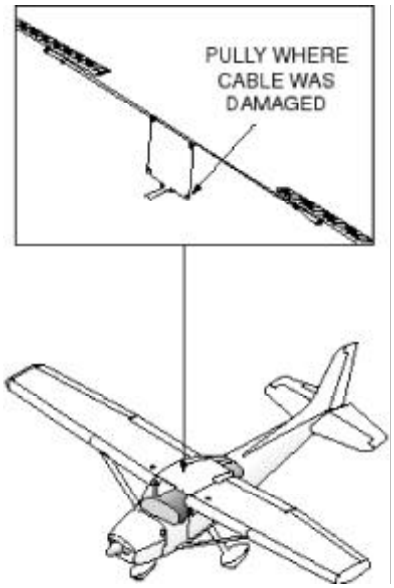

Cessna Model 172G Skyhawk — **Defective Elevator Bellcrank Security 2730**

During a scheduled inspection, four rivets on the lower fuselage skin were found loose. The rivets were located between the wing strut lower attachment points.

Further inspection disclosed these four rivets attached the elevator bellcrank support bracket (P/N 0513063-1) to the lower fuselage skin. There was evidence that the support bracket had been "flexing," and numerous cracks were found in the bend radii of the forward and aft flanges. The left forward flange was separated from the bracket. This bellcrank support bracket has been superseded by a new part (P/N 0513063-3) which is more structurally substantial and uses ten rivets to attach the lower fuselage skin.

This has been the subject of four previous articles in this publication (February 1993, August 1993, December 1995, and July 1996), and operators of like aircraft are strongly encouraged to have this area inspected. If defects are found, the new type of support bracket should be installed.

Part total time-5,451 hours.

Cessna Model 172R Skyhawk — **Misrouted Flight Control Cable 2710**

While an inspection was being conducted, the autopilot servo control cable was found wrapped around the right aileron control cable.

According to the manufacturer's manual, the cables should not be crossed. The control cables were inspected for damage and rerouted before the aircraft was returned to service. The submitter stated "the aircraft was delivered by the manufacturer with this condition."

It is a very good idea, even with brand new aircraft, to conduct a complete, by-the-book annual inspection on newly acquired aircraft before they are placed in service.

Part total time-489 hours.

Cessna Model 182J Skylane — **Restricted Elevator Travel 2730**

During an annual inspection, the elevator travel was found to less than the prescribed limit.

An investigation disclosed the "elevator up travel" was 18 degrees, and the technical data requires 26 plus or minus 1 degree of "up travel." While checking for the cause of this defect, a "Tinnerman" type hose clamp was found to be caught between the left control yoke shaft and the control yoke support assembly. The control yoke was prevented from moving the last 2 inches in the aft direction. The source of this clamp could not be determined. However, the submitter stated that various avionics installations had been accomplished in the past 2 years. It was speculated that the clamp may have been lost during one of those installations.

The importance of good housekeeping and accountability of tools and hardware can not be stressed enough. Many aircraft accidents and incidents have been caused by a stray tool or piece of hardware. It is something like the definition of a "weed." A weed is defined as a "misplaced plant."

Part total time not reported.

Cessna Model TU-206G Turbo Stationair — **Elevator Trim Tab Corrosion 2731**

During a scheduled inspection, a corroded elevator trim tab was discovered.

The maintenance technician noticed "blistered" paint around the rivet heads on the upper surface of the elevator. Eight rivets were used to secure the trim tab control rod bracket (P/N 1234009-1), and all eight rivets were corroded. When the technician "picked" at the rivet heads with his fingernail, six of the

eight rivet heads popped off of the shank. This elevator trim tab was "foam filled," and the aircraft was typically operated in a salt air environment. It was believed that these factors were responsible for this defect.

It was recommended that all operators inspect this area for delamination and/or corrosion, especially when a foam filled trim tab is in use. Cessna provides a replacement trim tab (P/N 123466-10) which does not contain foam.

Part total time-3,748 hours.

Cessna Model 337A Skymaster	**Broken Rudder Bar Supports 2720**

The pilot delivered the aircraft to maintenance and reported there were inconsistent rudder trim inputs. Also, the rudder control inputs felt "funny."

An inspection revealed that both center rudder bar supports (P/N's 1513500-13 and -14) were cracked. This allowed the rudder bar to move in relationship to rudder pedal inputs. The aircraft had a history of landing accidents, and it was not known if this caused or contributed to the rudder bar support cracks. This area should be thoroughly checked during scheduled inspections and maintenance.

Part total time-3,800 hours.

Cessna Model 402B Businessliner	**Faulty Engine Ignition Harness 7420**

During normal flight operations, the pilot noticed the left engine's performance was rough. The aircraft was landed and dispatched to maintenance.

It was determined that the left magneto ignition harness lead to the lower spark plug for the No. 5 cylinder was shorted. The ignition lead had no external evidence of chafing or other damage. The lead was shorted internally, and no energy was supplied to the spark plug. Given the short operating time of the ignition harness, it seems likely that the defect may have occurred during manufacture. A thorough receiving inspection, including an electrical test, may have prevented the defective part from being installed.

Part total time-79 hours.

Cessna Model 421B Engine Model TCM GTSIO520H Golden Eagle	**Broken Bolt 8500**

During a scheduled inspection of the engine exhaust system, a 3/8-inch bolt shank was found protruding from the right forward lower side of the engine crankcase just above the oil pan.

The bolt (P/N 538811) shank was protruding from its hole. It was chafing on the exhaust system's cross-over tube. The bolthead and washer could not be found. The length of time this bolt was broken could not be determined. The exhaust cross-over tube prevented the bolt shank from coming all the way out of the hole. The engine had been installed after an overhaul in May 1989. The submitter did not elude to the severity of chafing on the exhaust cross-over tube.

Part total time not reported.

Cessna Model 441 Conquest	**Defective Rudder Bearings 2720**

While the rudder for repairs was being removed, the top and middle hinge point needle bearings "fell apart." Another report from a different submitter related similar discrepancies at the top and middle rudder hinge points.

There is currently no inspection interval or life limit for these bearings (P/N MS24462-4); however, they should be inspected during required inspections. The submitter recommended that the manufacturer should establish inspection and lubrication criteria to be accomplished at specific time intervals.

Part total time-4,268 and 4,461 hours.

Cessna Model 650 Citation — **Defective Cabin Heater Switch 2140**

A functional test of the cockpit and cabin overtemperature switches was conducted in accordance with Cessna Inspection Card 21-08. During this test, the cabin overheat switch (P/N 1173T42) failed.

The "duct overtemperature" indicator failed to illuminate at the appropriate time during the test. When the switch was removed and tested with a Fenwall unit, it tripped at 360 degrees Fahrenheit. The test parameters require the switch to trip at 300 degrees Fahrenheit. The tolerance limits of this switch are designed to prevent excessive operational temperatures from developing within the cabin heater system. The submitter stated that this condition could have resulted in severe damage to the entire system. Considering the high number of operating hours on this switch, it seems logical that age was a significant factor in its failure.

Part total time-6,239 hours.

PIPER

Piper Model PA 18 Super Cub — **Tailwheel Assembly Crack 3222**

The tailwheel fork assembly was found cracked during an annual inspection.

The crack was located at the top center area of the fork assembly. (Refer to the following illustration.) It appeared the crack originated at the hole for the pin that is used to hold the lower thrust washer in place. The 2-inch long crack traveled down around the lower center section of the fork.

The submitter speculated that this defect may have been caused by metal fatigue due to age and operational stress.

Part total time-691 hours.

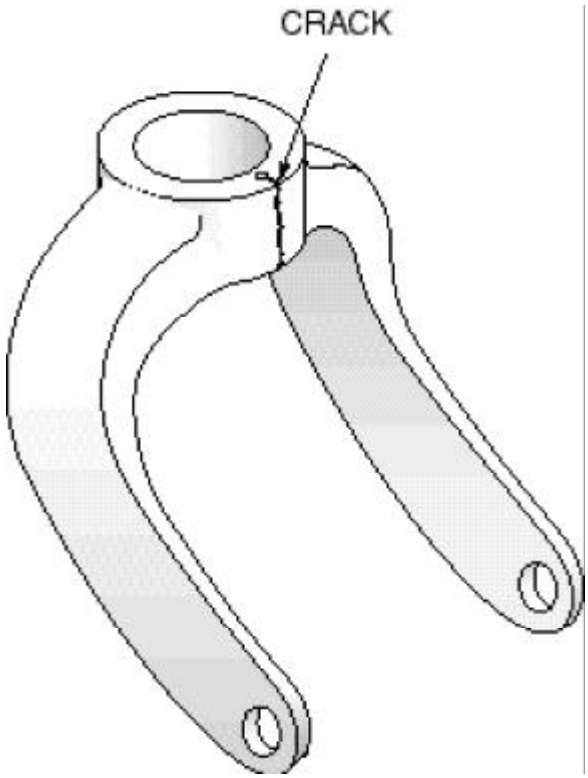

Piper Model PA 24-400 Comanche — **An Unbelievable Happening 7820**

While flying, the pilot (the only occupant) was completely incapacitated by carbon monoxide fumes. The aircraft flew for approximately 1.9 hours before fuel exhaustion stopped the engine. The aircraft landed itself in a hay field. The aircraft sustained substantial damage; however, the pilot received only minor injuries. Amazing!

An investigation of the wreckage disclosed that the exhaust system muffler (P/N 24484-01) on the right side of the engine failed causing carbon monoxide fumes to be drawn into the cockpit. The muffler was severely cracked. Surely, this individual experienced "divine intervention" which brought him back to Earth in one piece!

Part total time-624 hours.

Piper
Model PA 28-181
Archer

Aileron Bellcrank Interference
2710

While checking the aileron rigging, it was discovered that the two aft bolts were chafing on the aileron push-pull rod.

The chafing action occurred on both the left and right sides each time the ailerons were moved. The four bolts (P/N AN23-12) that connected the aileron cables to the bellcranks were not correct for this installation. A review of the current technical data gave the correct bolts (P/N NAS1103-7D). There is a difference in strength and length between these two bolts. Damage to the push-pull rods was minimal. If this problem had not been detected, it could have become much more significant. Close attention to detail will alleviate this type of problem.

Aircraft total time-2,737 hours.

Piper
Model PA 28RT-201
Arrow

Electrical System Damage
2400

While "troubleshooting" for the cause of intermittent radio operation, terminal 2 on the avionics relay was discovered to be damaged (deteriorated).

The submitter stated the damage was caused by overheating of the terminal. The adjacent wiring was also heat damaged. It was suspected that corrosion, resulting from exposure to moisture, caused the overheated condition at the terminal. The avionics relay is located in an area which is prone to moisture.

The submitter recommended that a sealant should be applied to the terminal after installation of the wires.

Part total time-2,388 hours.

Piper
Model PA 31-350
Chieftain

Hydraulic Pump Failure
2913

The pilot reported that the landing gear was very slow to cycle.

A test of the hydraulic system disclosed that the right engine-driven hydraulic pump was inoperative. When the pump was removed, the drive shaft was found to be sheared. The pump was disassembled for further inspection, and one of the two check valve/restrictors was found to be missing. Pieces of the missing part were found in the hydraulic system filter. The submitter believed the check valve/restrictor became dislodged from its installed position and passed through the pump gears. The part jammed the gears, causing the shaft to shear and caused damage to the pump gears.

Information concerning how the check valve/restrictors became dislodged was not given by the submitter.

Part total time-440 hours.

Piper
Model PA 31T-620
Cheyenne

Air-Conditioner System Component Failure
2100

The flightcrew reported that sparks were coming from the right engine nacelle at the air-conditioner condenser airscoop. The right engine generator was turned off; however, the sparks continued. The engine was secured. A single-engine landing was made without incident.

An investigation revealed the air-conditioner condenser impeller fan had separated from the fan motor shaft. The fan blades chafed through the insulation on the generator wire, which runs from terminal "C" to the engine starter, causing electrical arcing. The submitter suggested this area be inspected frequently for condition and security of the impeller blade assembly. Generator wire routing and security should also be checked in this area.

Part total time not reported.

Piper
Model PA 31T-620
Cheyenne

Elevator Cracks
5520

During a scheduled inspection, several cracks were found in the elevator skin.

The cracks were found on both the left and right elevators. It appeared the skins had cracked from the inside to the outside. Further investigation revealed the lower elevator spar (P/N 45951-06) radii were also cracked. The submitter did not offer a cause or cure for these defects. However, it does seem likely that age and corrosion may have contributed to the metal fatigue.

Part total time-6,426 hours.

Piper **Model PA 31T-620** **Cheyenne**	**Defective Main Landing Gear** **3230**

During a scheduled inspection, a landing gear retraction test was completed. The left main gear aft uplock support bracket was found cracked.

The crack had progressed through approximately 90 percent of the bracket assembly (P/N 40616-3). Complete failure of the bracket was eminent and would have led to additional landing gear damage. The landing gear had undergone a detailed inspection 12 hours prior to this finding. The submitter did not speculate concerning a possible cause or cure for this defect. However, it would be a good idea to give this area special attention during inspections and maintenance.

Part total time-4,200 hours.

Piper **Model PA 34-200T** **Seneca**	**Inoperative Stabilator Trim** **2740**

The pilot reported that during a landing approach the stabilator trim system did not function.

When maintenance personnel investigated this problem, they found that the stabilator trim cable was severely frayed and was off of the pulleys for the autopilot and electric trim servos at fuselage station (FS) 187.84. This cable was installed as part of Supplemental Type Certificate (STC) SA1147CE for installation of the King KFC200 autopilot system. The autopilot and electric trim servo cable pulleys are very small in diameter; therefore, the .125-inch trim cable is required to travel around a very small radius. Individual cable wires and strands in this area are known to break, and detection requires removal of the cable. The submitter stated that this problem is more prevalent during cold weather operations. Also, flightcrews commonly “help” the electric trim function by applying manual trim inputs during cold weather operations. The submitter speculated this action “slides” the cable through the pulleys which causes the type of damage found in this case.

Part total time not reported.

Piper **Model PA 46-350** **Malibu**	**Fuel Filter Security** **2821**

While servicing the fuel bowl filter segments, the threaded post used to retain and secure the filter and bowl to the assembly body was found loose.

The post was held in place by only one thread. There are eight full threads provided for the post. The submitter speculated that the post may not have been fully threaded into position during a prior installation.

Part total time-108 hours.

HELICOPTERS

McDONNELL DOUGLAS

McDonnell Douglas **Model 369D**	**Tail Rotor Bearing Failure** **6520**

After a “chip light” illuminated, the tail rotor gear box was disassembled. The tail rotor output shaft duplex bearing (P/N 369D25420) was discovered to be defective. Metal flakes were discovered in the inner-bearing race. Also, the inner-bearing race was severely galled. The submitter stated: “This was the second failure of the duplex bearing on this

aircraft within 600 hours of operation over a 17-month time period."

No cause or cure for the problem was offered by the submitter.

Part total time-previously stated.

ROBINSON

Robinson Models R22 and R44 — **Excessive Main Rotor Head Wear 6220**

A report involving a Model R22M helicopter stated that during a 100-hour inspection, evidence of fretting was noted at the main rotor hub attachment bolt thrust washers.

The main rotor was disassembled, and severe wear was discovered on the main rotor head hub bearings. The journals, which "ride" inside these bearings, allowed relative motion between the main rotor hub and the attachment bolts. The submitter also stated this helicopter had been used in a harsh environment.

After the previous report was received, Mr. Andy Rembert, an FAA Airworthiness Inspector with the Flight Standards District Office located in Anchorage, Alaska, attached the following additional information to the report.

An investigation of this report revealed that the aircraft was normally operated at maximum gross weight which required manifold pressures to be higher. The manufacturer was contacted. The manufacturer stated "they were aware of other instances of similar defects which resulted from regular use at higher gross weights and manifold pressures." The manufacturer also stated: "Main rotor components, being returned from flight schools and recreational operators, displayed normal wear patterns and usually were serviceable throughout their established "time-before-overhaul."

It was recommended that operators of Model R22 and Model R44, which use higher than normal operating parameters, should increase the frequency of their inspections on the main rotor assembly. If not discovered early, wear problems in the main rotor hub assembly may result in "unrepairable damage."

Part total time-752 hours.

SCHWEIZER

Schweizer Model 269C — **Engine Control Linkage Failure 7603**

The engine throttle control failed; the engine went to idle RPM; the engine could not be controlled; a forced landing was required; and the aircraft sustained minor damage.

An inspection revealed that the interconnect rod, between the throttle servo bellcrank and the cable bellcrank (P/N 269A8418-21), had separated at the cable bellcrank pivot hole. (Refer to the following illustration.) Failure of this bellcrank occurred after 225 hours of operation, and the original bellcrank was replaced after 365 hours of operation. The manufacturer's maintenance manual recommends inspection and lubrication of the bellcrank and linkage at 25-hour intervals.

The submitter recommended close adherence to the manufacturer's published inspection and lubrication schedule.

Part total time-previously stated.

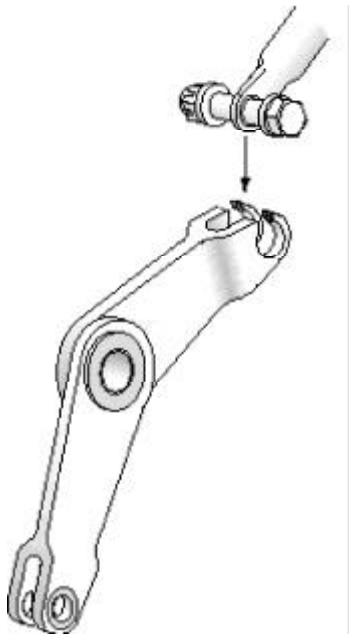

AMATEUR, EXPERIMENTAL, AND SPORT AIRCRAFT

KITFOX

Kitfox Model II Engine Rotax Model 582

Engine Starter Ring Gear Failure 8011

During a preflight inspection, metal filings were found in the engine starter area.

Further inspection revealed a large crack near a bolt hole on the starter ring gear (P/N 834-050). The crack was approximately .125 inch. (Refer to the following illustration.) Additional smaller cracks were found emanating from the vicinity of the other bolt holes. Also, the ring gear displayed evidence of heat damage. This is not an uncommon occurrence, and Rotax has issued Service Bulletin (SB) 4UL90-E which gives specific instructions for inspection and/or replacement criteria. This defect could result in a catastrophic failure during flight and deserves prompt attention.

It was recommended that all operators using the Model 532 or Model 582 engines should check the starter ring gear in accordance with SB 4UL90-E.

Part total time-185 hours.

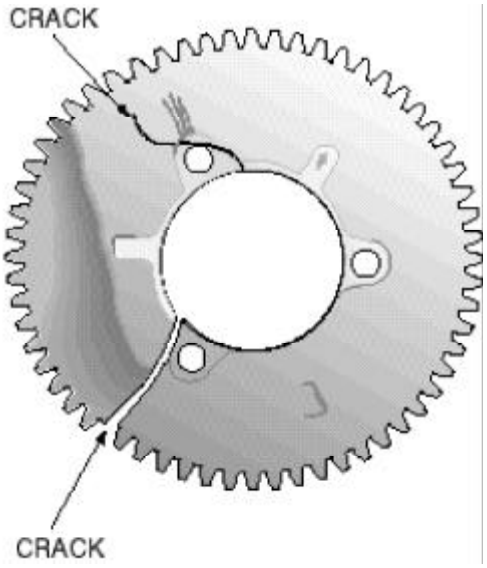

MINI-MAX

Mini-Max

Engine Failure 2800

Information for the following article was submitted by Mr. Tim Smyth, an aerospace engineer with the FAA Aircraft Certification Office, ACE-111, located in Kansas City, Missouri.

During flight, the aircraft suffered complete engine failure which resulted in an off-airport landing accident.

After an examination of the aircraft, it was speculated that fuel contamination had caused restricted fuel supply to the engine. The fuel system was designed without providing a sump drain to periodically remove water

and/or contamination. Standard aviation construction and maintenance practices dictate the need for sump drains in the aircraft fuel system. This provides an acceptable level of safety for the aircraft occupants.

It was recommended that all fuel system designs incorporate fuel tank and system sump drains at appropriate locations in the system. Sometimes, overlooking small details can have a devastating effect!

Aircraft time not reported.

VAN'S

Van's Model RV-6 — **Engine Control Failure 7602**

The pilot reported that during flight the engine mixture control became unresponsive, and a forced landing was required.

An inspection disclosed that the mixture control cable had broken. The submitter believed this failure was caused by vibration and stress.

It was recommended that a "heavier cable with threaded terminals" should be used for control of the engine mixture.

Part total time-114 hours.

PROPELLERS AND POWERPLANTS

TELEDYNE CONTINENTAL

Teledyne Continental Model IO-520-C7B — **Vibration And Power Loss 8530**

This engine was installed on the left side of a Beech Model B-58 aircraft.

Just after takeoff, the pilot noticed the left engine began to vibrate and there was sporadic loss of power. A safe landing was made, and the aircraft was taken to the hangar for maintenance.

During an investigation, the number six cylinder push-rod was found bent, and the push-rod tube was broken. The cylinder was removed, and the cause of this defect was determined to be a screw which had been ingested into the cylinder. The submitter stated that good housekeeping procedures and accountability of hardware during maintenance would reduce the possible recurrence of this defect. Given the short operating time since this cylinder had been installed, the submitter's speculation seems to be sound.

Part total time-3 hours.

ACCESSORIES

CHAMPION OIL FILTER

During an engine oil change on a Slingsby Model T67M 260-T3 aircraft with a Textron Lycoming Model AE10-540-D4A5 engine, the new oil filter was found defective.

The Champion oil filter base flange (P/N CH48110), which is inside the base seal and outboard of the inlet holes, was found cracked at several locations. The submitter speculated this defect occurred during the manufacturing process. New oil filters should be thoroughly inspected prior to installation. If defects are noted, they should be reported using FAA Form 8010-4, Malfunction Or Defect Report.

This report has been forwarded to the responsible FAA aircraft certification office for appropriate action.

FUEL AND OIL DRAIN VALVES

Information for the following article was furnished by Mr. Roger Pesuit, an aeronautical engineer with the FAA Aircraft Certification Office located in Los Angeles, California. This subject prompted the issuance of FAA Safety Recommendation 97.079.

Curtis valves are in use as fuel and oil sump drains on many general aviation aircraft. Valve failures have been reported and entered into the FAA Service Difficulty Program data base. Most of the failures involved loss of the inner shaft and pin, which allowed the fluid content of the system to be lost. In most cases (other than drains located forward of the firewall) when the inner valve shaft is missing, there is no way to shut off the fluid supply.

The valves are available in a variety of sizes, are all similarly constructed, and are all marked “Curtis CCX-XXX” on the actuation pin. (Refer to the following illustration.) Most of the failures occurred when the valve was closed and the stem fell through the valve body. Normally, the stem was prevented from moving beyond the valve seat by the molded seal and cap which have a larger diameter than the valve body opening. The valve shaft will be lost when the retention cap and seal wear to such an extent that their diameter is reduced to equal or less than the valve body opening.

The sealing rings used on these valves are manufactured specifically for this application. They are round on the inner and outer diameters, and they are flat on the top and bottom surfaces. The flat surfaces of the seal provide support against the flat surface of the valve stem. The seals are constructed of a “Nitrile” material. Age may cause the seals to deteriorate. When a drain valve begins to leak, it has been common practice to replace the seal with an “O-ring.” An “O-ring” may appear to fit and provide an initial seal; however, it may not be adequate to support the stem. In order to reduce the possible damage to the cap when the old seal is being pried off with a sharp instrument, Curtis has recently stopped selling the seals.

The “Nitrile” seals are not expected to last over 10 years; however, some of these drain valves are more than 20 years old.

The following recommendations were offered to preclude age-related failures. During scheduled inspections, inspect the external portions of the drain valves for leakage, damage, and condition. If the age of the valve can be determined, it will be a good indicator of the condition of the seal. If defects are found, the valve should be removed for inspection of the seal ring and cap for condition and security. When operating the drain valves, slight hand pressure should be used to oppose the spring force when closing the valve. This reduces the impact force on the seal ring and cap that occurs if the valve is allowed to “snap” closed. If there is any doubt concerning the condition of a drain valve, it should be replaced.

All operators are encouraged to report valve failures to the FAA using FAA Form 8010-4, Malfunction or Defect Report. These reports help with defect analysis and solutions to problems.

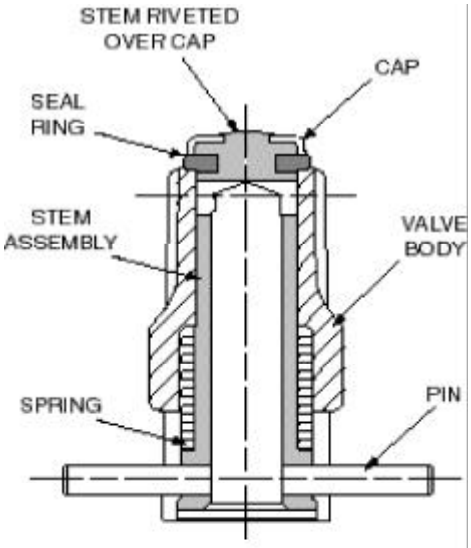

TYPICAL VALVE CROSS SECTION

RUBBER HOSE ASSEMBLIES

The purpose of this notification is to advise all owners, operators, and maintenance entities of the critical importance of following required procedures when building up replacement rubber hose assemblies. Instances have been reported in which various defects have occurred due to improper assembly of field repairable rubber hose assemblies. These defects have ranged from minor cuts of the hose inner tube to major defects, such as hose collapse. Typically, these defects occur in situations where the rubber hose assemblies have been built using techniques or standards less than those used by aircraft hose manufacturers or certified hose shops.

One such incident occurred when a rubber hose (-8 size) was hand assembled using the "wrench and vise" method. The rubber inner tube of the hose was twisted from the body of the primary hose which caused the hose to collapse. Further examination also revealed various cuts on the hose, apparently made during assembly.

Proper hand assembly of rubber hoses using the "wrench and vise" method can certainly be attained. However, it must be made clear that along with the assembly of the hose, the required "proof tests" and "ball checks" must be performed to ensure that the hose assembly is airworthy. In some instances, these tests will also help to reveal any manufacturing anomalies or irregularities that may be present in the hose. Although rare, these occasional irregularities will not normally impact the performance of the hose, when the hose is assembled to required specifications. However, certain hand assembly techniques could exacerbate an irregularity to the point of causing a hose assembly to be unsuitable for use. These "acceptance tests" are necessary to ensure detection of any potential problems created by the assembly process. These tests are performed on 100 percent of the hose assemblies manufactured by hose manufacturers or certified hose shops.

SEATBELT AND SHOULDER HARNESS DETERIORATION

The FAA continues to receive reports concerning seatbelt and shoulder harness restraint deterioration caused by prolonged exposure to the Sun. The ultraviolet rays of the Sun, as well as exposure to extreme temperatures, have a devastating effect on the materials used to construct aircraft personnel restraint systems.

Title 14 of the Code of Federal Regulations (14 CFR) part 43, appendix D (c)(2), requires seats and safety belts to be inspected at each annual or 100-hour inspection.
Section 43.15(c)(1) requires the use of a checklist while performing an annual or 100-hour inspection. This checklist must include the scope and detail of items contained in part 43, appendix D.

To meet the requirements of 14 CFR, safety belts must conform to standards established by the Federal Aviation Administration (FAA). These standards are contained in Technical Standard Order C22, and set forth the strength requirements to ensure safety of the aircraft occupants. During an inspection, if there is any doubt about safety belts or shoulder harnesses meeting the established FAA standards, it is recommended that they be replaced.

AIR NOTES

MAINTENANCE AND INSPECTIONS

The following article was submitted by the FAA Aircraft Certification Office, ACE-115A, located in Atlanta, Georgia. The information pertains equally to all aircraft, and no specific aircraft was identified.

Recently, some flight tests were to be performed using an aircraft which was manufactured 19 years ago. This aircraft had an annual inspection 3 months prior to the time it was to be used in the tests.

While conformity of the aircraft for this series of tests was being established, three major discrepancies were noted. First, a bulkhead had been installed in the field via a service bulletin; however, the number of rivets specified by the service bulletin were not used (three had been left out). Second, the elevators had cracks in the trailing edge which had been stop drilled and had a weld applied along with automobile putty. Third, the rudder cable tension was found to be 15 pounds less than the specified value, well outside the tolerance limits.

It should be clear that if a component is signed off in the logbook as having been installed per a specific document, then it should be done to all the requirements of the document or authorization for any deviations should be listed. With rivets missing, this bulkhead may not have been able to perform its intended function. Likewise, any flight control surface which has damage should be either repaired or replaced. The action taken should be in accordance with the manufacturer's maintenance manual or an analysis from an acceptable source such as a Designated Engineering Representative. It should be confirmed that the flight control surface is within the specified balance limits and still meets the strength requirements. The cable tension is another highly important item. The subject aircraft was approved for spins and had been used for spin training. With the rudder cable tension less than the specified minimum, rudder deflection under flight loads will be less than full travel, and affect spin entry and recovery. The entry could be different from that expected, and/or the recovery may take longer and could result in no recovery.

Since this aircraft was procured from a normally reliable source, it is believed to be representative of the type of maintenance which many of these older and perhaps some newer aircraft receive. Also, since this aircraft is representative of many aircraft manufactured by different companies and used in a training environment, care should be exercised to ensure that all of the manufacturer's maintenance procedures are properly accomplished. It cannot be emphasized too highly that aircraft, especially those used for training, should have the proper maintenance performed in order to achieve the expected performance.

AIRSPEED INDICATOR TESTING

An Aviation Safety Inspector submitted a Safety Recommendation 96.310 which would require a change to Title 14 of the Code of Federal Regulations (14 CFR) part 43, appendix E. The proposed change would require testing of the airspeed indicator. This recommendation would necessitate changes to part 43, appendix E, and 14 CFR part 91. After evaluating the recommendation, the FAA's Aircraft Maintenance Division, AFS-300, has determined the proposed change is not necessary.

This information is provided with a suggestion that maintenance personnel conduct a test of the airspeed indicator calibration. This test should only be accomplished by qualified personnel and could be done in conjunction with the altimeter system test and inspection required by part 43, appendix E.
14 CFR part 21, section 21.1323 requires "each airspeed indicator must be calibrated" and delineates the parameters for calibration. It seems reasonable that calibration of this instrument should be checked periodically instead of waiting for it to fail. All aircraft should be equipped with a reliable means of indicating airspeed whether operating under visual flight rules (VFR) or instrument flight rules (IFR).

AIRWORTHINESS DIRECTIVES (AD'S) ISSUED IN DECEMBER 1997

97-25-05 Robinson R22 helicopters requires replacing carburetor and gage.

97-26-02 Eurocopter Deutschland BO-105 models requires inspection for cracks in ribbed area of main rotor mast flange.

97-26-03 Eurocopter Deutschland MBB-BK 117 models requires inspection for cracks in ribbed area of main rotor mast flange.

97-20-13 Eurocopter Deutschland EC135 models requires inspection to prevent failure of tail rotor.

97-26-18 Eurocopter France SA-360C helicopters requires replacement of main gear box input bevel pinion.

97-26-09 Agusta A109 model helicopters requires inspecting Gleason crown.

98-01-13 Boeing McDonnell 369 series requires inspection of main rotor blades.

97-25-01 Raytheon 58, 60, 90, 100, 200, 300, and 2000 series requires replacing outflow/safety valves in pressurization system.

97-25-02 Mitsubishi Heavy Industries U-2B series requires amending Limitations Section of AFM to prohibit positioning of power levels below flight idle stop.

97-25-03 Raytheon 65, 90, 99, 100, 200, 300, 1900, and 2000 series aircraft requires amending Limitations Section of AFM to prohibit lifting or positioning power levers.

97-25-04 Cessna 208 models, 425, and 441 airplanes requires amending Limitations Section of AFM to prohibit positioning of power levers.

97-26-08 Mooney M20 models requires removing fuel cap retaining lanyard from fuel cap assemblies.

97-26-12 Piper PA-31 and PA-42 series requires amending Limitations Section of AFM to prohibit positioning of power levers below flight idle stop.

97-26-14 Maule MXT-7 and M-7-235 series requires amending Limitations Section of AFM to prohibit positioning of power levers.

97-26-13 Empresa EMB-110 models requires amending Limitations Section of AFM to prohibit positioning of power levers.

97-26-16 Cessna 402C and 414A models requires inspecting engine mount beams for cracks.

97-26-15 Raytheon 1900 models requires lubrication of main landing gear actuator rod ends.

98-01-01 Priority Letter on Cessna 172R airplanes requires proper installation of identification placard.

98-01-14 Priority Letter on Cessna 182S models requires inspection to prevent carbon monoxide gas from entering cabin heating system and cabin.

97-26-20 Aviat S-2 models requires inspecting upper longerons.

97-25-02 Mitsubishi MU-2 series requires amendment of Limitations Section of AFM to prohibit positioning of power levers.

97-25-08 GE CJ610 series turbojet and CF700 series turbofan engines requires removal from service of defective turbine torque rings and compressor drive shafts.

97-25-09 Allison Engine model 250-C40B turboshaft engines requires installation of placard requiring pilots to record torque level and time-in-service.

97-26-17 Teledyne Continental models requires ultrasonic inspection for subsurface fatigue cracks in crankshafts.

98-01-08 Priority Letter on Teledyne Continental models requires removal of certain exhaust roller rocker arms.

ALERTS ONLINE

This publication is now available through the FedWorld Bulletin Board System (BBS), via the Internet.

You may directly access the FedWorld BBS at telephone number (703) 321-3339. To access AC 43-16, General Aviation Airworthiness Alerts, through the Internet, use the following address: "http://www.fedworld.gov/ftp.htm". This will open the "FedWorld File Transfer Protocol Search And Retrieve Service" screen. Page down to the heading "Federal Aviation Administration" and select "FAA-ASI". The file names will begin with "ALT", followed by three characters for the month, followed by two digits for the year (e.g. "ALTJUN96.PDF").

Also available at this location are the Service Difficulty Reports (SDR's) for the past 2 months, which may be of interest.

The Regulatory Support Division (AFS-600) has established a "HomePage" on the Internet, through which the same information is available. The Internet address for the AFS-600 "HomePage" is:

"http://www.mmac.jccbi.gov/afs/afs600"

Also, this address has a large quantity of other information available. There are "hot buttons" to take you to other locations and sites where FAA Flight Standards Service information is available. If problems are encountered, you can "E-mail" us at the following address.

If you wish to contact the staff of this publication, you may do so by any of the means listed below.

Editor: Phil Lomax, AFS-640
Telephone No.: (405) 954-6487
FAX No.: (405) 954-4570
or (405) 954-4748

Internet E-mail address:
ga-alerts@mmacmail.jccbi.gov

Mailing Address:
FAA
ATTN: AFS-640 ALERTS
P.O. Box 25082
Oklahoma City, OK 73125-5029

We welcome the submission of aircraft maintenance information via any form or format. This publication provides an opportunity for you to inform the general aviation community of problems you have encountered as well as bringing them to the attention of those who can resolve these problems. Your participation in the Service Difficulty Program reporting process is vital to ensure accurate maintenance information is available to the general aviation community.

ELECTRONIC AVAILABILITY OF INFORMATION

In light of the previous article, we solicit your input and ideas for the future of this

publication. The electronic information media has made available a vast amount of information in a more expedient and efficient manner. We believe the expanded use of this media can bring about the conveyance of safety information in a more efficient and timely manner.

We are currently distributing approximately 28,000 printed copies of this publication each month, and the distribution number continues to increase. The cost for publishing, printing, and mailing this publication has also increased, and there has been a substantial negative impact on our budget allotment.

In an effort to save tax dollars and make better use of the electronic media, we encourage our readers to cancel their printed copy subscription to this publication and use the computer to download the monthly issues. (The instructions for downloading the Alerts were given in the preceding article.) We will be happy to help you if you require further assistance. Some of you may not yet have the equipment necessary to receive the information electronically, and you are welcome to continue receiving it in the printed form.

There have been some efforts to charge an annual subscription fee for this publication. So far, these efforts have not been given much credence. We will make every effort to keep this a free-of-charge publication. However, we need your input and ideas. Would you be willing to pay a nominal subscription charge for this publication?

We appreciate your interest in this publication and the opportunity to serve you. Please offer any comments, questions, or suggestions to us via any of the means listed in the preceding article.

SUSPECTED UNAPPROVED PARTS SEMINAR

As announced in previous editions of the Alerts, the Designee Standardization Branch, AFS-640, will begin presenting the Suspected Unapproved Parts Seminar. The first seminar will be held on January 14-15, 1998, in Sacramento, California. The second seminar will be held on January 28-29, 1998, in Fort Worth, Texas.

Seminar dates will be announced in the Alerts, the Designee Update Newsletter, and on the Internet under FedWorld.gov. You may access the FedWorld BBS directly at (703) 321-3339. You may access the Alerts through the Internet, using the Regulatory Support Division, AFS-600, “HomePage” at the following address.

http://www.mmac.jccbi.gov/afs/afs600

The seminar will discuss the following:

1. What is an approved part?
2. How can approved parts be produced?
3. What is a suspected unapproved part?
4. How is a suspected unapproved part reported in accordance with FAA Order 8120.10A, Suspected Unapproved Parts Program, and utilizing FAA Form 8120-11, Suspected Unapproved Parts Notification?

The cost of this 8-hour seminar will be $60. The seminar may be used for the Inspection Authorization (IA) renewal training requirement contained in Title 14 of the Code of Federal Regulations (14 CFR) part 65, section 65.93(a)(4).

The seminar is open to the aviation industry. Anyone wishing to attend may telephone (405) 954-0138. Payment is required in advance by using VISA, MasterCard, or a check. **When scheduling attendance, please reference “AFS-75.”**

SCHEDULE FOR SUSPECTED UNAPPROVED PARTS SEMINAR (SUPS)

Seminar No.	1998	Location
759803	Feb 11	College Park, GA
759804	Apr 22	Charleston, WV
759805	May 13	Cleveland, OH
759806	Jul 15	Seattle, WA
759807	Jul 17	Anchorage, AK
759808	Aug 5	Ft. Lauderdale, FL
759809	Sep 16	Springfield, IL
759901	Oct 21	Rochester, NY
759902	Nov 18	Wichita, KS

If you require additional or special SUPS seminars, please write to: FAA; ATTN: Mr. Elmer Hunter (AFS-640); P.O. Box 25082; Oklahoma City, OK 73125. Depending on manpower and the availability of AFS-640 personnel, the requests for additional SUPS seminars may be authorized. The cost for the additional SUPS meetings is $60 per person. The registration process is the same as previously discussed in this article. Additional SUPS seminars will be made available to the public regardless of location. If you have specific questions regarding an additional SUPS seminar, please contact Mr. Elmer Hunter at (405) 954-4099.

FAA FORM 8010-4, MALFUNCTION OR DEFECT REPORT

For your convenience, FAA Form 8010-4, Malfunction or Defect Report, will be printed in every issue of this publication.

You may complete the form, fold, staple, and return it to the address printed on the form. (No postage is required.)

SUBSCRIPTION REQUEST FORM

For your convenience, a Subscription Request Form for AC 43-16, General Aviation Airworthiness Alerts, is printed in every issue.

If you wish to be placed on the distribution list, complete the form, and return it, in a stamped envelope, to the address shown on the form.

OMB No. 2120-0003

DEPARTMENT OF TRANSPORTATION
FEDERAL AVIATION ADMINISTRATION

MALFUNCTION OR DEFECT REPORT

OPER. Control No.	
ATA Code	
1. A/C Reg. No.	N-

Enter pertinent data	MANUFACTURER	MODEL/SERIES	SERIAL NUMBER
2. **AIRCRAFT**			
3. **POWERPLANT**			
4. **PROPELLER**			

5. SPECIFIC PART (of component) CAUSING TROUBLE

Part Name	MFG. Model or Part No.	Serial No.	Part/Defect Location.

6. APPLIANCE/COMPONENT (*Assembly that includes part*)

Comp/Appl Name	Manufacturer	Model or Part No.	Serial Number

Part TT	Part TSO	Part Condition	7. Date Sub.

8. Comments (*Describe the malfunction or defect and the circumstances under which it occurred. State probable cause and recommendations to prevent recurrence.*)

Optional Information:

Check a box below, if this report is related to an aircraft

☐ Accident; Date _____ ☐ Incident; Date _____

DISTRICT OFFICE	OPERATOR DESIGNATOR
OTHER	
COMMUTER	
FAA	
UPS	—
AIR TAXI	( )
LESOR	(
OPER.	WRITTEN BY:
REP. AVIA.	TELEPHONE NUMBER:

FAA Form 8010-4 (10-92) SUPERSEDES PREVIOUS EDITIONS

Use this space for continuation of Block 8 (*if required*).

U.S. Department
of Transportation

**Federal Aviation
Administration**

Flight Standards Service
Designee Standardization Branch
P.O. Box 25082
Oklahoma City, OK 73125-5029

AFS-640

Official Business
Penalty for Private Use $300

NO POSTAGE
NECESSARY
IF MAILED
IN THE
UNITED STATES

BUSINESS REPLY MAIL

FIRST CLASS PERMIT NO. 12438 WASHINGTON, D.C.

**Federal Aviation Administration
AFS-640 (Alerts)
P.O. Box 25082
Oklahoma City, OK 73125-5029**

SUBSCRIPTION REQUEST FORM

ADVISORY CIRCULAR (AC) 43-16, GENERAL AVIATION AIRWORTHINESS ALERTS

Please use this request to subscribe to AC 43-16 or to change your address if you are presently on the mailing list. Once your name has been entered, you will continue to receive this publication until you request your name be removed or a copy is returned because of an incorrect address.

Because this mailing list is independent of other FAA mailing lists, it is necessary that you notify us when your address changes. (Our address is on the following subscription request.) If you are presently receiving this publication it is **NOT** necessary to send another subscription request. The following subscription request may be duplicated, as necessary. **TELEPHONE REQUESTS WILL ALSO BE ACCEPTED; THE TELEPHONE NUMBER IS (405) 954-6487. THE FAX NUMBERS ARE: (405) 954-4748 and/or (405) 954-4570.**

AC 43-16 SUBSCRIPTION REQUEST

If you would like to **BEGIN** receiving AC 43-16, or **CHANGE** your address, please complete the following:

PLEASE PRINT INFORMATION LEGIBLY, INCLUDE YOUR ZIP CODE, AND THE DATE OF YOUR REQUEST.

NAME:_____

ADDRESS:_____

_____

_____

ZIP CODE_____

DATE:_____

CIRCLE ONE OF THE FOLLOWING:

1. This is a **NEW** subscription.
2. This is an **ADDRESS CHANGE**.

SEND **ONLY ONE** SUBSCRIPTION REQUEST TO THE FOLLOWING ADDRESS:

FAA, Regulatory Support Division
ATTN: AFS-640 (Phil Lomax)
P.O. Box 25082
Oklahoma City, OK 73125-5029

If you require more than one copy of AC 43-16, it may be reproduced.

U.S.Department
of Transportation

Federal Aviation Administration

Designee Standardization Branch
ATTN: ALERTS, AFS-640
P.O. Box 25082
Oklahoma City, OK 73125-5029

AFS-640

Official Business
Penalty for Private Use $300

BULK MAIL
POSTAGE & FEES PAID
Federal Aviation Administration
PERMIT No. G44