U.S. Department of Transportation
Federal Aviation Administration

General Aviation Airworthiness Alerts

AC No. 43-16

ALERTS

ALERT NO. 226
MAY 1997

Improve Reliability-Interchange Service Experience

CONTENTS

FAA SAFETY RECOMMENDATIONS

AIRCRAFT WITH COMPLEX FUEL SYSTEMS 1
FUEL SYSTEM CONTAMINATION 2
UNAPPROVED PART NOTIFICATION 3

AIRCRAFT

AEROSPATIALE 4
AMERICAN CHAMPION 4
BEECH 5
CESSNA 8
MOONEY 12
PIPER 12

HELICOPTERS

AMERICAN EUROCOPTER 15
BELL 15
HILLER 15
MCDONNELL DOUGLAS 16
ROBINSON 16

AGRICULTURAL AIRCRAFT

GRUMMAN 16
PIPER 17

AMATEUR, SPORT, AND EXPERIMENTAL AIRCRAFT

KITFOX 17
PICTENPOL 17
STOLP STARDUSTER 18

PROPELLERS AND POWERPLANTS

TELEDYNE CONTINENTAL 18
TEXTRON LYCOMING 18

AIRWORTHINESS DIRECTIVES (AD'S)

AD'S ISSUED IN MARCH 1997 19

AIR NOTES

SPRING IS COMING! 20
ALERTS ON LINE 21
FAA FORM 8010-4, MALFUNCTION OR DEFECT REPORT 22
SUBSCRIPTION REQUEST FORM 22

Contents of this publication are informational only. Due to the need for extensive distribution of this publication, only one copy is provided to an addressee; however, this publication may be duplicated.

U.S. DEPARTMENT OF TRANSPORTATION
FEDERAL AVIATION ADMINISTRATION
WASHINGTON, DC 20590

GENERAL AVIATION AIRWORTHINESS ALERTS

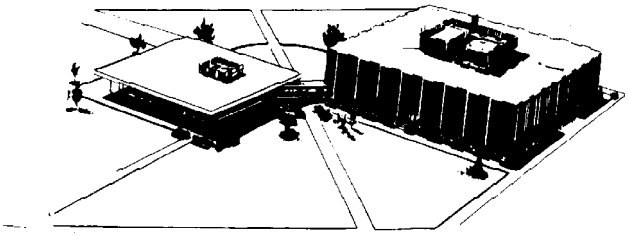

FLIGHT STANDARDS SERVICE
Mike Monroney Aeronautical Center

The General Aviation Airworthiness Alerts provide a common communication channel through which the aviation community can economically interchange service experience and thereby cooperate in the improvement of aeronautical product durability, reliability, and safety. This publication is prepared from information submitted by those of you who operate and maintain civil aeronautical products. The contents include items that have been reported as significant, but which have not been evaluated fully by the time the material went to press. As additional facts such as cause and corrective action are identified, the data will be published in subsequent issues of the Alerts. This procedure gives Alerts' readers prompt notice of conditions reported via Malfunction or Defect Reports. Your comments and suggestions for improvement are always welcome. Send to: FAA;
ATTN: Maintenance Support Branch (AFS-640);
P.O. Box 25082; Oklahoma City, OK 73125-5029.

FAA SAFETY RECOMMENDATIONS

The following articles were submitted by the FAA Aircraft Certification Office located in Wichita, Kansas for the purpose of making everyone aware of the FAA Safety Recommendations mentioned in each article. The information in each article is not specific to an aircraft make or model.

AIRCRAFT WITH COMPLEX FUEL SYSTEMS

Information for this article was the result of FAA Safety Recommendations 96.295, 96.296, 96.297, 96.298, and 96.278.

The pilot of a small turboprop aircraft heard a loud, abnormal noise which came from one side of the aircraft. The ailerons became difficult to operate; the pilot declared an emergency, and an uneventful landing was made.

An inspection revealed the wing-mounted integral fuel tank had imploded. The cause was traced to obstructions in the primary and secondary fuel vents. The primary fuel vent was obstructed with material from an insect nest, and the nest had been covered with paint. The secondary fuel vent, in the fuel caps, was obstructed with paint from a recent paint job.

Another aircraft fuel tank was being inspected for proper operation of the fuel isolation valves when "abrasion" of the interior fuel system plumbing was discovered. The "abrasion" was so severe that it penetrated the plumbing wall thickness. This problem was caused by improper installation, which

allowed air to enter the plumbing and caused the fuel flow interruption.

These incidents make the need for very detailed inspection critical to flight safety for small aircraft equipped with complex wing-mounted integral fuel systems. The FAA recommends that all available information published by airframe and fuel system component manufacturers be utilized when servicing, maintaining, and inspecting these aircraft.

FUEL SYSTEM CONTAMINATION

Cessna, Piper, Aviat, Champion, Taylorcraft, And Others — **Gravity Feed Fuel Systems 2810**

The following article is not associated with an FAA Safety Recommendation; however, the subject is worthy of your interest.

An aircraft accident investigation revealed fuel starvation was the cause of an accident on an aircraft with a gravity feed fuel system. Approximately 6 gallons of fuel were found in the fuel tanks.

Investigators determined that a small amount of fuel system contamination migrated into the carburetor bowl, and a particle of the contamination was ingested into the main fuel jet. The main fuel jet orifice was approximately 65 percent blocked by another particle. During inspection of aircraft equipped with fuel gascolators (strainers) containing debris or damage, the carburetor drain should always be removed. When fuel system contamination is found, an inspection for downstream contamination should be conducted.

Single-Engine High-Wing Aircraft — **Aircraft Equipped With Above Wing Primary Fuel Vent Inlets**

The following article was the result of FAA Safety Recommendation 96.259.

Recently, an aircraft was involved in a fuel-exhaustion incident. The cause of the incident was attributed to obstruction of the primary vent inlet, which resulted in siphoning of fuel during flight. Many older model aircraft are equipped with fuel tank vents mounted on fuel caps and/or are above the wing. These fuel tank vents are difficult, if not impossible, for a pilot to observe during flight. If the fuel caps are installed backwards, or if the primary above wing forward facing vents become obstructed, fuel siphoning may occur. This fuel siphoning action may elude the pilot's observation.

The FAA has discouraged the continued use of above-wing primary fuel vent inlets on recently type certificated aircraft. This has been done by issuing written regulatory directives to remove these devices from some older model aircraft. Pilots and inspection personnel are encouraged to be vigilant during preflight, annual, and routine inspections of aircraft equipped with overwing mounted fuel system primary vent inlets to ensure the operational integrity of these systems.

All Aircraft Makes And Models — **Inspection Of Fuel Lines And Hoses**

The following article was the result of FAA Safety Recommendation 96.324.

During an annual inspection, an aircraft equipped with a cabin door designed for sport parachute jumping operations was found to have been installed without FAA approval. When the nonstandard door design was presented to the FAA for field approval, it was discovered that the fuel lines running down the forward and rear door frames had been damaged by the (unapproved) door latching

mechanism. Both fuel lines had been reduced to less than 25 percent of their original tubing wall thickness.

Research of the FAA Service Difficulty Reporting (SDR) program data base, for this as well as other aircraft equipped with approved nonstandard cabin door installations, revealed no other reports of this nature. However, other aircraft had been reported to have fuel line abrasion problems caused by such things as flight control cables, upholstery fasteners, electrical wires, and engine controls.

The FAA recommends that all flammable fluid rigid lines, flexible lines, and hoses receive (at least) an annual inspection of their full length and circumference. The inspection should include a detailed examination for abrasion problems caused by flight control cables, upholstery fasteners, electrical wires, and engine controls.

UNAPPROVED PART NOTIFICATION

No. 96-111
March 21, 1997

This notice originated from the Atlanta Manufacturing Inspection District Office.

AFFECTED AIRCRAFT: General Aviation and Bell Helicopters (as indicated below).

The purpose of this alert is to advise all owners, operators, and maintenance entities that an undetermined quantity of aircraft and engine parts have been manufactured without having Federal Aviation Administration (FAA) design or production authorization. The manufacturer is: Brown Aircraft Supply; 4123 Muncie Road; Jacksonville, FL 45371.

BACKGROUND: During a suspected unapproved parts investigation, the FAA determined that Brown Aviation Supply was manufacturing replacement aircraft and engine parts (see following list) and selling them for installation on type certificated products without an FAA design or production authorization.

Brown Part #	Nomenclature	Installed On:
BA-463-441	Grommet, Hi-Temp	Piper PA-28
BA-587-600	Seat Suspension	Piper
BA-79072	Bumper, Block Gear	Piper
BA-215-58-12A	Blade, Windshield Wiper	Piper
BA-2249-2	Seal, Door	Cessna
BA-65773	Seal, Wing Root	Piper
BA-017A	Seal, Tank and Wing Root	Beech Baron
BA-152-84	Seal, Pass Window	Beech
BA-0005	Seal	Bell
BA-0008	Seal	Bell
BA-115155	Seal, Door	Beech
BA-189-139	Seal, Door	Piper
BA-E4724-2	Seal, Door	Cessna 401/402
BA-1379098H89	Seal, Gear Door	Jetstream
BA-47	Seal	Jetstream
BA-187-707	Seal, Window	Piper
BA-860006	Seal, Door	Cessna
BA-581-535	Seal, Door	Cessna 401/402
BA-187-530	Seal, Interior	Piper
BA-36-430011	Seal, Door	Beech
BA-19878-00	Seal, Elev. Hinge	Piper
BA-4404-2	Cap Gasket	Bellanca
BA-80019	Cap Gasket	Piper
BA-66815-00	Cap Gasket	Piper
BA-1509-2	Cap Gasket	Cessna
BA-461-903	Gasket, Tank Cover	Piper
BA-581-535	Seal, Door	Cessna 401/402
BA-530162	Gasket, Valve Cover	Numerous Applications

RECOMMENDATION: Owners, operators, maintenance entities, and manufacturers should verify, in writing, the FAA approval status of parts purchased from Brown Aviation Supply. Type certificated products are required to conform to their type design. Owners, operators, maintenance entities, and manufacturers should inspect their affected aircraft and/or stock for the referenced part numbers. Parts which cannot be traced to an approved source should be considered suspect and appropriate action should be taken.

FURTHER INFORMATION: The FAA would appreciate any information concerning the discovery of these parts from any source and the means used to identify the source. Questions concerning removal of these parts, or any unapproved parts, from aircraft and/or stock, should be directed to your local Flight Standards District Office.

For further information contact: FAA; Atlanta Manufacturing Inspection District Office; Campus Building, Suite 2-150; 1701 Colombia Avenue; College Park, GA 30337. The telephone number is: (404) 305-7330, and the FAX is: (404) 305-7333.

This notice was published through the Suspected Unapproved Parts Program Office, AVR-20; telephone (703) 661-0581; and FAX (703) 661-0113.

AIRCRAFT

AEROSPATIALE

Aerospatiale Model TB-21 Trinidad TC — **Sudden Engine Oil Loss 7920**

The pilot reported experiencing a sudden loss of all the engine oil. A safe emergency landing was made, and maintenance personnel were summoned.

Troubleshooting this problem disclosed the cause was a large crack in the turbocharger oil return line. This line runs from the turbocharger to the reservoir located under the engine. The crack traveled around approximately 300 degrees of the line's circumference. The crack was located where it made a 90-degree bend, just below the mounting flange. (Refer to the following illustration.) The submitter speculated this defect was caused by metal fatigue due to vibration. When the crack location on the defective line was examined, the line wall thickness was much thinner on the outside of the 90-degree radius, where the crack had occurred. The submitter stated that this part is supplied by the aircraft manufacturer and not the engine manufacturer.

Part total time-1,738 hours.

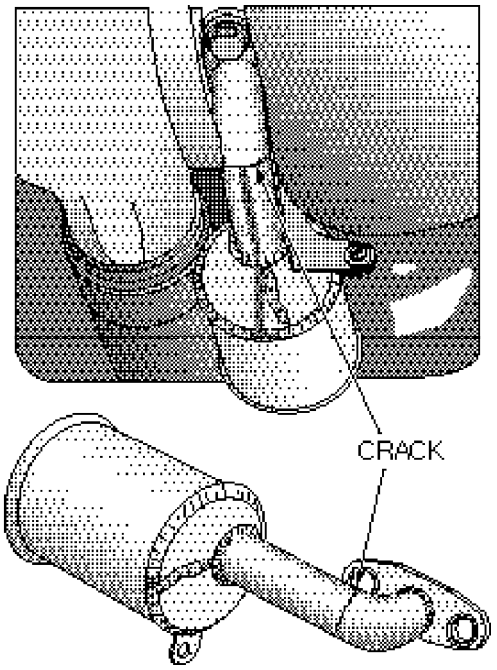

AMERICAN CHAMPION

American Champion Models 7AC, 7ACA, S7AC, 7BCM, 7CCM, L-16A, L-16B, S7CCM, 7DC, 7EC, 7FC, 7GC, 7GCA, 7GCB, 7GCBA, 7HC, 7JC, 7ECA, 7GCAA, 7GCBC, 7KCAC, 8KCAB, and 8GCBC (All models with wood spars.) — **Wing Spar Structural Failure 5711**

The cause of a recent aircraft accident involving an American Champion Model 8GCBC aircraft was determined to be in-flight wing spar structural failure. There was no indication of prior wing damage. All Airworthiness Directives (ADs) had been complied with, including AD 87-18-09 which was effective 10/18/87. AD 87-18-09 requires a one-time compression crack inspection of the side surface of the spar, the rear side of the front spar, and the front side of rear spar, with repeat compliance if subsequent wing

structural damage has occurred. AD 87-18-09 was reportedly complied with 6 years previous to this accident.

Subsequently, Canadian AD CF-92-07 (similar to AD 87-18-09), effective 5/1/92, required repetitive 500-hour inspections. Repetitive inspection requirements were based on new technical and empirical data that was not available at the time AD 87-18-09 was issued. This data was generated from repetitive 100-hour fiber-optic boroscope inspections by an operator of a fleet of American Champion 8GCBC aircraft. These aircraft were used extensively in glider-tow operations (600 glider tows per each 100 hours of operation). The results indicate it is unlikely that compression cracking will be detected until it is in an advanced stage of propagation. The crack initiation starts along plywood doublers, behind loose ribs, and spar chafing areas that are difficult to detect without detailed boroscope inspection procedures.

American Champion's Service Letter (SL 406), dated 3/28/94, details additional areas to be inspected and recommends a 100-hour inspection interval.

A recent review of wood spar service difficulty reports (SDRs) reveals that loose or missing rib nails, compression cracks, etc., are routinely reported on many models of American Champion (Aeronca/Bellanca/Champion) wood spar aircraft with or without prior wing damage history. Normal operations involving aerobatic flight, crop spraying, banner operations, and glider tow operations, with repeated exposure to low level gusty wind conditions, may present the potential for the initiation of a compression crack.

It is highly recommended that operators of these aircraft models and other small aircraft of similar design (incorporating wood spars with fabric covered wings) review SL 406 and conduct a wood spar inspection for a compression crack, followed by 100 to 500 hour repetitive inspections, depending on operational exposure. Additionally, operators are encouraged to incorporate all other applicable manufacturer's Service Letter recommendations. These recommendations may include wing strut attachment fittings for corrosion and/or cracking, loose or missing nails, rib to spar chafing, or compression cracking.

Aircraft total time not reported.

BEECH

Beech Model B23 Musketeer	**Smoke In The Cockpit 7410**

The pilot reported there was smoke in the cockpit when the engine was started.

An investigation disclosed a ground wire (Number J4A18N), used to ground the starter vibrator circuit, was also grounded through a copper clamp to the shielding of the magneto "P" lead. The submitter stated: "The ground wire could not handle the load (electrical) during engine start and over time, deteriorated to the point where the wire burned through." This area deserves attention during scheduled inspections.

Part total time-2,350 hours.

Beech Model B24R Sierra	**Nose Landing Gear Failure 3230**

The pilot reported that after landing, the nose landing gear collapsed while taxiing to the parking ramp.

An investigation revealed the bracket (P/N 169-360025-47), which holds the nose gear "down" limit switch, was elongated where it was mounted to the nose gear assembly. This allowed the limit switch to give a false "down-and-locked" indication. The submitter recommended this bracket be checked for security at every opportunity.

Part total time-1,302 hours.

Beech Model 35 Bonanza — **Wing Attachment Hardware 5740**

During an annual inspection, corroded wing attachment hardware was found.

The manufacturer's maintenance manual establishes a life limit of 15 years for the wing attachment bolts (P/N NAS150-33M) and requires corrosion treatment and magnaflux inspection every 5 years. There was no evidence in the aircraft maintenance records of compliance with these requirements. The aircraft was manufactured in 1960. When not in use, some aircraft are parked outside on a parking ramp, and other aircraft are stored in a hangar. This aircraft was stored in a hanger. Aircraft parked outside are susceptible to an accelerated rate of corrosion due to environmental conditions. The corrosion found on this aircraft had not progressed to the severe state; however, that does not justify neglecting the maintenance manual requirements.

Aircraft owners, operators, and maintenance personnel should demand a neat, well organized, and complete set of maintenance records. They should be easily used and understood. This will save time and money when scheduled inspections are accomplished and may save embarrassment during an FAA records inspection. Maintenance records which are neat and well maintained give an indication of the condition of the aircraft. Sloppy records make proper inspection much more difficult. The more time an inspector spends digging through sloppy records, the more discrepancies are likely to be found.

Part total time not reported.

Beech Model 58TC Baron — **Landing Gear Emergency Extension Failure 3230**

During an annual inspection, while an operational test was being done of the emergency landing gear extension system, a loud "bang" was heard.

An investigation disclosed the left main gear retraction rod assembly (P/N 35-815125-45) had been previously cracked approximately 8 inches outboard of the actuator rod assembly. The retraction rod failed completely during this test. After this failure, the left main gear would not extend or retract. The submitter speculated this defect may have been caused by improper "up-lock" tension.

Part total time-2,331 hours.

Beech Model 76 Duchess — **Main Landing Gear Structural Defects 5743**

While complying with the requirements of Airworthiness Directive (AD) 91-14-14, structural defects were found in both main landing gear "A" frames.

AD 91-14-14 incorporates, by reference, the manufacturer's Service Bulletin (SB) 2361, Revision 3. SB 2361 requires only a dye-penetrant inspection of the "A" frames, and no defects were found using this method. The right and left main landing gear "A" frames were removed from the aircraft for further inspection.

Using the magnaflux inspection technique, cracks were found in both "A" frames. The submitter recommended replacing the old "A" frames with the new "A" frames listed in SB 2361. Also, AD 91-14-14 should be revised to include a magnaflux inspection of the "A" frames. This report has been sent to the responsible FAA aircraft certification office for appropriate action.

Part total time-4,476 hours.

Beech Model C99 Airliner — **Main Landing Gear Collapse 2911**

While the aircraft was being towed, the left main landing gear collapsed.

An inspection revealed the hydraulic system powerpack (P/N 99-388002-9) accumulator (P/N 99-388006-3) leaked the nitrogen precharge pressure past the piston. This

allowed the nitrogen pressure to increase the hydraulic pressure on the retraction side of the landing gear system, which caused the left main gear to collapse. The submitter stated: "Later part number hydraulic system powerpacks incorporate a vent valve which precludes pressure buildup in the event of accumulator precharge leakage. "
The submitter recommended the manufacturer provide a kit which would "retrofit" the earlier powerpacks to include the vent valve.

Part total time not reported.

Beech	**Engine Inlet**
Model B100	**Anti-Icing Malfunction**
King Air	**3020**

During a training flight, there were light icing conditions. The crew was practicing a missed approach, and during the "climb out," the right engine was retarded to the "flight idle" position to simulate an engine-out condition. All anti-icing systems were on and operating normally. After completion of the engine-out exercise, the right engine throttle was advanced to the normal cruise setting. The pilot noticed very little, or no response, in the engine operating parameters. However, shortly thereafter, the right engine "flamed out." An uneventful landing was made, and the aircraft was delivered to maintenance.

While troubleshooting, the technician found that the right engine inlet anti-ice line "B" nut had backed off. It was speculated that vibration caused fatigue cracking and failure of the anti-ice line adjacent to the "B" nut. This finding led to inspection of the left engine anti-ice system, and the "B" nut threads were also found damaged. The submitter stated this damage was caused by "excessive heat, vibration, and because the "B" nut was made of aluminum attached to the stainless steel fitting. " The damaged "B" nuts, which were removed, did not have accommodations for safety wire. However, safety wire holes were drilled in the replacement line "B" nuts.

A very similar problem was reported in the April 1984 edition of this publication. This occurrence involved a Mitsubishi Model MU-2B-35. This problem may occur in other aircraft which have had the Garrett Model TPE 331 series installed on them. Maintenance technicians should be alert for this condition during scheduled inspections and maintenance. This report has been sent to the responsible FAA aircraft certification office for appropriate action.

Part total time not reported.

Beech	**Elevator Torque**
Model B100	**Tube Wear**
King Air	**2740**

During a scheduled inspection, "free play" was found between the elevators.

Further investigation disclosed the elevator pin attachment holes were severely worn. The manufacturer's technical data contains a procedure for reaming these holes in the elevator torque tube. Even after reaming these holes to the maximum diameter, the "free play" could not be removed. It was necessary to replace the torque tube assembly (P/N 115-524046-3). The manufacturer's data requires that the torque tube be inspected every 1,000 hours of operation. According to the aircraft maintenance records, the last primary inspection was accomplished 127 operating hours prior to this occurrence. Also, prior to this occurrence, there had been no previous complaint of abnormal flight characteristics.

Part total time-4,998 hours.

Beech	**Engine Control**
Model B200C	**Failure**
King Air	**7322**

When the pilot retarded the power levers for a descent, the left engine remained at the cruise power setting. The engine reached the "high torque limit" and an in-flight shutdown was accomplished. A safe single-engine landing was made.

An investigation disclosed that a cotter pin, used on the castle nut, hung on the engine cowling. The castle nut and cotter pin were installed on the fuel control rod at the

actuating lever (which is adjacent to the cam box). The submitter stated the cotter pin had not been properly installed. When this type of installation is made, it is wise to run the control through its full range of travel, and ensure that proper clearance is maintained.

Part total time not reported.

Beech	**Hydraulic System**
Model 400A	**Failure**
Beechjet	**3243**

The pilot reported that after departure, the hydraulic fluid “low” annunciator light illuminated. A decision was made to return to the airport to have the problem corrected. While inbound, the right hydraulic pressure “low” annunciator light illuminated. The hydraulic system pressure gauge remained within limits. The right hydraulic pressure “low” annunciator cycled on and off several times, tripping the “master caution” annunciation flasher each time. Within a few miles of the airport, the left hydraulic pressure “low” annunciator light illuminated, and the pressure gauge dropped to near zero. At this time, the decision was made to use another airport, with a longer runway, for a “no flap” landing. The landing gear and brakes were operated using the emergency systems, and a safe landing was made.

An initial inspection revealed hydraulic fluid was dripping from the entire length of the lower fuselage. Further inspection disclosed the hydraulic reservoir was empty. The source of the leak was traced to the pilot’s right brake master cylinder (P/N 45AS38401-012). The master cylinder piston rod had become disconnected from the cylinder barrel assembly. While disassembling the master cylinder, it was discovered that the piston retaining nut (P/N NAS679C08W) loosened and came off of the piston rod. (Refer to the following illustration.) This allowed the piston rod to protrude past the cylinder barrel and gland seals. The hydraulic system fluid had been depleted. The defective master cylinder was sent to the manufacturer for evaluation. Since the failure occurred internally, the submitter recommended the manufacturer provide some guidance concerning inspection of inservice master cylinders for loose piston retaining nuts.

Part total time-2,545 hours.

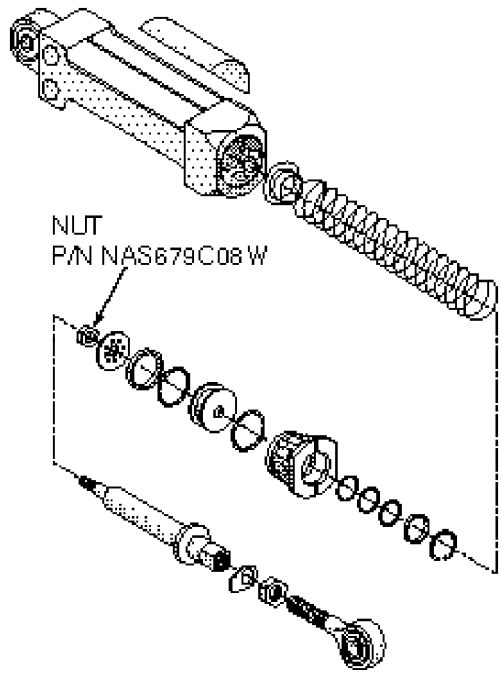

CESSNA

Cessna	**Engine Fuel**
Model 152	**Starvation**
Aerobat	**2810**

The day prior to this incident, the aircraft was parked outside in the rain and snow. The temperature was above freezing; however, that night the temperature went well below freezing.

When the engine was started the next day, it failed while taxiing. An investigation revealed the fuel cap (P/N B100142-1) vents were “frozen” closed. This created a vacuum in the fuel tanks as fuel was used by the engine, and eventually, there was inadequate fuel to

sustain engine operation. A thorough preflight inspection should prevent this type of problem.

Part total time not reported.

Cessna Model 180 Skywagon — **Improper Elevator Installation 2730**

The submitter stated that the elevators had been installed "up side down " on two separate aircraft, and both aircraft had been operating in this condition. The submitter asked the pilot about the landing characteristics for this aircraft, and the pilot stated it was impossible make a "three-point landing." When the submitter informed the pilot of the problem, the pilot was quite alarmed. With the yoke full aft, the elevator traveled approximately 3 inches above the neutral position.

Both of these aircraft had recently been painted, and the submitter speculated this is when the elevators had been installed "up side down." The elevator trailing edge rivets had been "bucked" very neatly. Without close observation, it was not readily apparent which was the "shop head" and which was the "buck tail end." This may have led the installer to make the mistake.

It would be wise to check the travel of any flight control surface when it is removed for maintenance. The submitter did not mention if the elevators had been balanced after they were painted.

Cessna Model R182 Skylane — **Landing Gear Selector Valve Hydraulic Fluid Leak 3234**

The pilot reported that when the landing gear was selected to the "down" position, prior to landing, hydraulic fluid began to drip onto the cockpit floor.

An inspection disclosed the landing gear selector valve (P/N 9881020-2) was the source of the fluid leak. The gear selector valve was removed, and it was determined that the cause of the leak was a deteriorated packing. The packing was installed on the union fitting for the "down" line. The remaining three fittings were disassembled, and their packings were also deteriorated.

The submitter speculated the age of these packings caused them to become hard and brittle. Also, when the fittings are tightened and not disturbed for a long period of time, they "take a permanent set."

Part total time-7,800 hours.

Cessna Model P210 Centurion — **Nose Landing Gear Structural Failure 3220**

The pilot reported the nose landing gear failed during landing.

An inspection revealed the nose gear fork had broken where it attached to the piston assembly (P/N 1243009-201). Also, a section of the nose gear fork was missing. (Refer to the following illustration.) The submitter speculated this failure was caused by a "hard landing." It is possible that during the landing, the nose landing gear contacted the runway before the main gear. The only cure for this defect is education!

Part total time not reported.

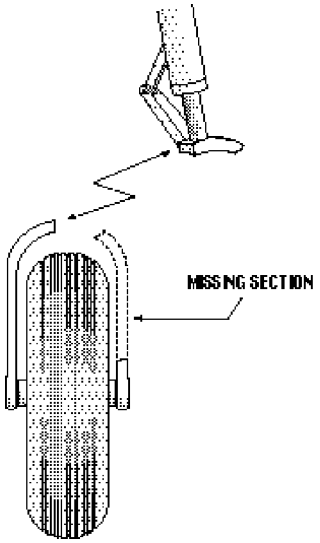

Cessna Model 310L — **Nose Landing Gear Linkage Failure 3230**

An investigation of a nose landing gear failure, during landing, revealed a broken nose gear linkage tube (P/N 0842121-1).

It was the submitter's opinion that the linkage tube was slightly bent when the landing gear was extended at an excessive airspeed. Also, it was speculated that after the tube is bent, even slightly, it will flex each time the landing gear is cycled. Eventually, this will result in "work hardening" of the metal and failure. The location of the tube makes it very difficult to properly inspect. The submitter suggested that the tube be removed, inspected, and reinstalled each 2,000 hours of operation.

Part total time-5,400 hours.

Cessna Models 401, 402, 402A, 402B, 402C, 404, 411, 411A, 414, 414A, 421, 421A, 421B, and 421C — **Wing Flap Control Cable Failure 2750**

Information for this report resulted from FAA Safety Recommendation 96-323. An aircraft was forced to land with a "split flap" condition.

An investigation revealed the left flap lower-extend cable was broken. The upper-extend cable and both return cables were removed for further inspection. When each cable was flexed, numerous broken cable strands were found. The maintenance technician then began inspecting all of the previously listed aircraft models, and all of the aircraft were found to have defective wing flap cables.

It was recommended that the flap control system cables on the previously listed aircraft models be inspected according to their respective maintenance manuals or Advisory Circular (AC) 43.13-1A, Acceptable Methods, Techniques, and Practices-Aircraft Inspection and Repair, whichever is applicable. The age and/or time of these defective cables was/were not given.

Part total time not reported.

Cessna Model 402B Businessliner — **Nose Landing Gear Failure 3220**

During a landing approach, the nose landing gear indicated "unsafe" when the pilot selected the "down" position. A ground observer informed the pilot the nose gear was trailing at approximately a 45-degree angle. A landing was made with the nose gear in the "up" position.

An inspection disclosed that the nose gear fork bolt (P/N 5045211-2) had broken. (Refer to the following illustration.) The submitter also found the bellcrank (P/N 0842104-3) was broken. The submitter speculated this defect resulted from failure of the fork bolt. Also, this defect may have been caused by metal fatigue, high time, and the age of the fork bolt.

Part total time-9,243 hours.

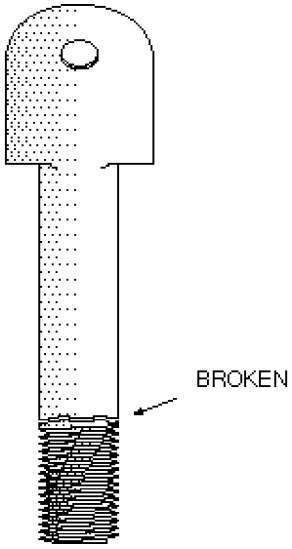

Cessna Model 414A Chancellor — **Landing Gear Malfunction 3230**

The pilot reported that when the landing gear was retracted after takeoff, the "gear unsafe" and the hydraulic pressure master caution lights remained illuminated. The aircraft was returned to the departure airport, and a safe landing was made.

After jacking the aircraft and performing an operational test of the landing gear, it was discovered that the right main gear up-lock hook assembly (P/N 5741222-18) was not engaging the up-lock roller (P/N 5141206-1). The up-lock hook assembly, the attaching bolt bushing (P/N NAS75-6-117), and the bearing block (P/N 5141203-3), were removed, cleaned, lubricated, and reinstalled. The landing gear was then operated through six cycles and operated properly each time.

The submitter stated this aircraft had been washed on a regular basis, including the wheel wells. It was speculated the lubrication had been removed during the washing process and was the cause of this defect. It was recommended that these areas be lubricated after each washing. This circumstance may also apply to other make and model aircraft with retractable landing gear.

Part total time not reported.

Cessna Model 560 Citation — **Aileron Travel Obstruction 2710**

After completion of a scheduled inspection, the aircraft was released for a test flight. After the test flight, the pilot stated: "The ailerons feel like they have a catch going from left bank to right bank."

An investigation disclosed that a screw (P/N MS27039-807) was chafing between the left aileron and the wing. To prevent this defect in the future, the operator added an item to their maintenance release sheet. Now the aileron air cap seals will be checked for foreign objects and chafing.

Part total time not reported.

Cessna All Models Affected By AD 85-10-02 — **Engine Induction Air Box 7160**

The purpose of this article is to remind owners and operators of the modification which will terminate the repetitive inspections of the engine induction air box required by Airworthiness Directive (AD) 85-10-02.

AD 85-10-02 was issued based on reports of engine induction air box cracks. These cracks could result in separation of a portion of the air box, and this could obstruct engine induction airflow. The AD requires a visual inspection, followed by repetitive visual inspections, each 100 hours of time in service. If cracks are found, the AD requires repair (as specified) or replacement of the air box with Cessna part number 1250725-8 prior to further flight. If the air box is repaired or replaced in accordance with the specifications of the AD, the recurring inspection requirement is terminated.

The FAA is recommending, but not requiring, that rather than relying on continued repetitive inspections, owners/operators of these aircraft repair or replace the induction air box in accordance with the provisions of AD 85-10-02.

If further information on this subject is required, you may contact Jack Pearson or Mike Kiesov at the following addresses and telephone number:

FAA, Wichita Aircraft Certification Office
ATTN: Jack Pearson
Mid-Continent Airport
1801 Airport Road
Wichita, KS 67209

or

FAA, Small Airplane Directorate
ATTN: Mike Kiesov
1201 Walnut Street, Suite 900
Kansas City, MO 64106
Telephone: (816) 426-6934

MOONEY

Mooney
Model M20G
Statesman

Wing Flap Hinge
Corrosion
5735

During an annual inspection, the inboard side of the inboard wing flap hinge was found severely corroded. The inboard hinges (P/N's 210048-00X and 210050-00X) on both wing flaps were corroded.

This aircraft had been retrofitted with Supplemental Type Certificate (STC) SA4023WE, which included flap hinge fairing. These fairings were installed using "blind rivets" and limited inspection access to the hinge area. The hinge corrosion had progressed to the point of exfoliation of the metal. The submitter recommended the fairings be removed to allow inspection access during scheduled inspections.

Part total time-2,900 hours.

PIPER

Piper
Model PA 23-250
Aztec

Fuel Leak
2823

During routine maintenance, fuel stains were noticed under the cockpit, on the "belly" skin.

An investigation revealed the fuel crossfeed valve fitting was cracked and leaking. The brass reducer fitting was cracked in two places, one of which extended through the fitting thickness. (Refer to the following illustration.) For further reference, an article on this subject was published in the January 1997 edition of this publication. Fuel leaks of any type in an aircraft create a very hazardous condition which deserves prompt and diligent attention.

Part total time-2,700 hours.

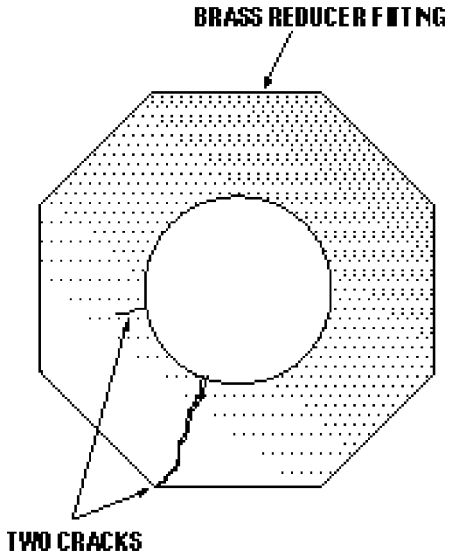

Piper
Model PA 23-250
Aztec

Landing Gear System
Failure
3230

The pilot reported the landing gear handle would not initially move to the "down" position. An exceptional amount of force was applied to the gear handle, and it moved to the "down" position. However, there was no indication that the landing gear was "down and locked." The emergency landing gear extension system was activated, and the landing gear locked in the "down" position. An uneventful landing was made.

When the normal and emergency gear extension systems were inspected, it was found that the CO2 bottle had been discharged; however, the priority valve had not functioned. When the emergency system was activated, the cable rigging was incorrect due to cable slippage. The hydraulic powerpack (P/N 31800-2) was found to have

internal defects and was replaced. The submitter stated that improper rigging of the emergency extension system cable and/or cable slippage caused the system to fail. It was recommended that rigging of the control and the priority valve cable housing safety wire be checked during scheduled inspections. This aircraft was manufactured in 1974, and the hydraulic powerpack had been installed as original equipment.

Part total time not reported.

Piper
Model PA 28R-180
Arrow

Engine Mount Tube Failure
5346

While changing the alternator on a transit aircraft, an engine mount tube was found broken.

Piper Service Letter (SL) 568 pertains to this subject; however, the maintenance records were not available for this aircraft and compliance could not be determined. The broken engine mount tube (P/N 67119-49) was located at the upper right position, and SL 568 lists an approved repair procedure for this defect. No cause for this defect was offered by the submitter.

Tachometer total time-2,001 hours.

Piper
Model PA 28R-200
Arrow

Aileron Bellcrank Structural Defect
2710

During an annual inspection, an aileron bellcrank attachment bracket was found cracked.

The lower right aileron bellcrank attachment bracket (P/N 67550-000) was cracked just above the forward-and-aft attachment bolts. The submitter speculated the cracks were caused by the aircraft being parked with the tail into the wind, without benefit of the flight control lock being installed. Metal fatigue, as well as age, may also have contributed to this defect.

Part total time-3,440 hours.

Piper
Model PA 28RT-201
Arrow

Engine Fuel Mixture Control Failure
7320

The pilot reported that during a local flight, at an altitude of 4,500 feet, the fuel mixture control was leaned until engine roughness was detected. An attempt was made to move the mixture control to enrich the mixture, but the control failed to move. The mixture control could not be moved from the “idle cutoff” position. A safe off-airport landing was made with no personal injuries or damage to the aircraft.

The engine installed in this aircraft was a Teledyne Continental (TCM), Model TSIO-360FB, and utilized a TCM fuel injector pump (P/N 646758-2). The fuel injector pump incorporates the fuel mixture control as an integral part. An investigation disclosed the mixture control arm, mechanical stop (steel roll pin) had migrated out of position and had locked the mixture control arm in the “idle cutoff” position. This roll pin is used as a stop for both the “idle cutoff” and the “full rich” positions. The stop, steel roll pin, is installed into the aluminum housing. The submitter stated the action of repeated stop contact and engine vibration caused the stop pin to elongate the aluminum housing; therefore, allowing the stop pin to become loose. (Refer to the following illustration.)

This system may also be used on other make and models of aircraft. The submitter contacted several other repair facilities and found it may be common practice (although not an authorized practice) to use “epoxy” filler in holes which have become elongated. It was properly stated that if the steel roll pin wears away the aluminum housing, it will surely do the same on the “epoxy” filler. This report has been sent to the responsible FAA aircraft certification office for appropriate action.

Part total time-1,500 hours.

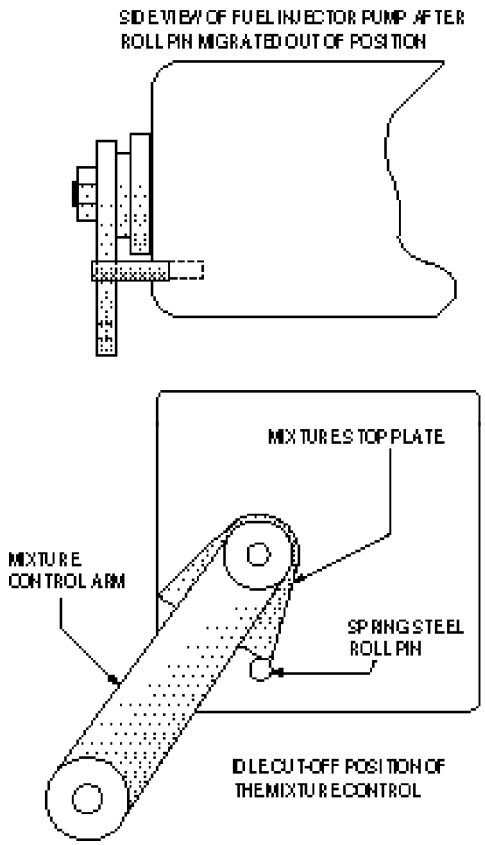

Piper
Model PA 31
Navajo

Nose Landing Gear
Failure
3230

The aircraft sustained substantial damage when the nose landing gear collapsed during landing.

During an inspection, the landing gear selector handle travel was found to be obstructed by an instrument panel shock mount screw. The screw contacted the gear selector handle when the “gear down” position was selected. Also, the landing gear system cable had been improperly rigged. The submitter suggested the gear handle travel be closely checked for obstruction during scheduled inspections.

Part total time not reported.

Piper
Model PA 31-310C
Navajo

Cockpit Fuel Odor
2820

The pilot detected an odor of fuel in the cockpit and cabin area.

An investigation disclosed that a fuel hose (Aeroquip Type 601) installed in the left wing root area was seeping fuel. Aeroquip has issued Service Bulletin AA135 which places a “life limit” of 2 years on this type of hose. The faulty hose was identified as being manufactured in the third quarter of 1988. Everyone involved in aviation should give flexible hoses their due respect and comply with the established life limits.

Part age, approximately 9 years.

Piper
Model PA 31-350
Chieftain

Engine Throttle
Failure
7603

The pilot reported the right engine throttle stuck at 30 inches of manifold pressure, and it was not possible to retard the throttle. A safe landing was made, and the aircraft was sent to maintenance.

During an inspection, the throttle cable (P/N 24894-02) sleeve was discovered to be loose. The sleeve had separated where it had been swaged into the housing at the engine end. This caused the cable to “kink” and would not allow the throttle to be retarded. The security of this installation deserves your close attention during scheduled inspections and maintenance.

Part total time not reported.

Piper
Model PA 34-200T
Seneca

Pitot Heat System
Failure
3030

The pilot detected the odor of electrical burning in the cockpit during flight. The smell seemed to originate from the left sidewall electrical switch panel. All of the anti-ice protection systems were operating at the time. A safe precautionary landing was made.

The switch panel was removed, the pitot heat system switch (P/N 99377-26) was found burned, and there was evidence of internal arcing. Other than internal switch failure, the submitter did not list a cause for this defect. It would be a good idea to visually check the switches inside this panel for security and condition during scheduled inspections.

Part total time-3,110 hours.

Piper
Model PA 42-720
Cheyenne

Flight Control Trim Switch Failure
2700

During a scheduled inspection, it was discovered that the control column flight control trim switch (P/N 688-285) had previously been repaired with "glue."

The trim switch was replaced with a new switch. The new switch "fell apart," at the forward seam, during an operational test. Another new switch was installed, and it also "fell apart." When the second switch failed, the back part of the switch fell into the center console, which caused an electrical short to the airframe. The submitter applied for, and was granted, an FAA field approval to install a "higher quality" switch. This "higher quality" switch solved the problem. This report has been sent to the responsible FAA aircraft certification office for appropriate action.

Part total time-"0" hours.

HELICOPTERS

AMERICAN EUROCOPTER

American Eurocopter
Model AS 350-B2
Ecureuil

Drive Shaft Rub
6500

During an annual inspection, a "rubbed" area was found on the short tail rotor drive shaft (P/N 350A34015003).

The "rubbed" area was located just aft of the engine. This area is very difficult to properly inspect, especially with both drive shaft covers in place. The engine mounts were inspected and found to be unserviceable. The mounts were replaced, and the "rubbing" problem was solved.

Part total time-1,103 hours.

BELL

Bell
Model UH-1B

Main Rotor Strap Failure
6220

During a "hover check," the main rotor grip assembly became detached.

The submitter stated it was apparent that the main rotor straps (P/N 204-011-113-1) failed. According to the aircraft maintenance records, both of the strap assemblies still had well over 500 hours of operation before their retirement times were due. No cause for this defect could be offered. When additional information becomes available, the submitter promised to send it to us. The new information will be published in a future edition of this publication.

Part total time-640 hours.

HILLER

Hiller
Model H-23B

Main Rotor Intermediate Drive Shaft Failure
6310

While performing a hover tracking-and-balance procedure on the main rotor blade assembly, there was a loud "bang," and the rotor RPM began to decay. A successful hovering autorotation was completed.

When the transmission was inspected, the intermediate drive shaft lower gear teeth displayed wear of approximately .030 inch. The shaft had sheared, causing the disengagement of the engine from the rotor

drive train. The mating gear located inside the "Mercury clutch housing" had approximately .037 inch of wear.

Part total time since overhaul-262 hours.

MCDONNELL DOUGLAS

McDonnell Douglas Model 369D — **Transmission Gear Wear 6320**

During a scheduled inspection, the main rotor transmission was opened. The main rotor output shaft ring gear (P/N 369D25127-11) and pinion (P/N 369D25125-13) were found severely "spalled" in several places.

The submitter did not offer a cause for this defect. It would be a good idea to pay close attention to this area during inspections and maintenance.

Part total time-447 hours.

McDonnell Douglas Model 369D — **Improper Gear Box Bearing Installation 6310**

When the engine gear box (P/N 6894171) was disassembled, the Number 4 bearing was found to have been improperly installed.

The bearing had not been "seated" all the way onto the journal of the helical gear. Also, the bottom flange of the oil nozzle (P/N 6875776) had been gouged by the bearing. Proper seating of these bearings is imperative for serviceable operation, and all measures to ensure proper installation should be taken.

Part time since overhaul-3,420 hours.

ROBINSON

Robinson Model R-22 Mariner — **Engine Exhaust System Obstruction 7820**

During an annual inspection, the engine exhaust system muffler was found to be partially obstructed.

After an investigation, it was determined that the muffler "flame tubes" were broken loose. There were several pieces of the "flame tubes" partially blocking the outlet port of the muffler. This condition may cause poor engine performance, fire, or other hazards to operation. It would be wise to inspect for this condition at every opportunity.

Part total time-831 hours.

AGRICULTURAL AIRCRAFT

GRUMMAN

Grumman Model G-164B Ag Cat — **Supercharger Failure 8120**

The pilot experienced a total loss of engine power shortly after takeoff. A forced landing resulted in substantial aircraft damage; however, there were no personal injuries.

An inspection disclosed that the three supercharger impeller support bearings (P/N 12768) failed. Twenty-one of the bearing rollers were recovered from the blower support bearing cavity. The submitter did not offer a cause for this defect.

Part total time since overhaul-496 hours.

PIPER

Piper
Model PA 25-150
Pawnee

Defective Engine Mount Brackets
5346

During a scheduled inspection, two of the engine mount brackets (P/N 61294-00) were found cracked.

One of the mount brackets was completely broken, and the other mount bracket was cracked half way through. Since these brackets allow the engine to "swing" away from the firewall, an in-flight failure could be catastrophic. The submitter speculated the brackets failed due to age and metal fatigue. It was recommended that this area receive special attention during inspections and maintenance.

Part total time-3,815 hours.

AMATEUR, SPORT, AND EXPERIMENTAL AIRCRAFT

KITFOX

Kitfox 1

Engine Failure
8500

During cruise flight, the engine suddenly lost power and went to "idle" RPM. The engine did not respond to throttle movement and remained at "idle" RPM.

An inspection revealed the throttle cable had broken. The submitter did not identify the particular throttle cable used on this aircraft. It would be wise for all builders of amateur aircraft to use a high-quality aircraft-type control cable for this installation.

Part total time-202 hours.

PICTENPOL

Pictenpol

Engine Oil Loss
8550

The second owner of this aircraft experienced engine oil loss and engine failure. An emergency landing was made, and there was substantial damage to the aircraft.

An investigation revealed that an engine oil system drain extension, installed by the original builder, had broken allowing all of the oil to escape. (Refer to the following illustration.) The oil drain extension had been fabricated from copper tubing, and it was intended to facilitate draining the engine oil without removing of the lower engine cowling. The oil drain extension was broken adjacent to the adapter on the bottom of the oil sump. This extension was not a part of the original aircraft plans, and the extension had been devised by the builder. Buyers of amateur aircraft should inspect them closely for adherence to the plans or the kit manufacturer's data.

Part total time-120 hours.

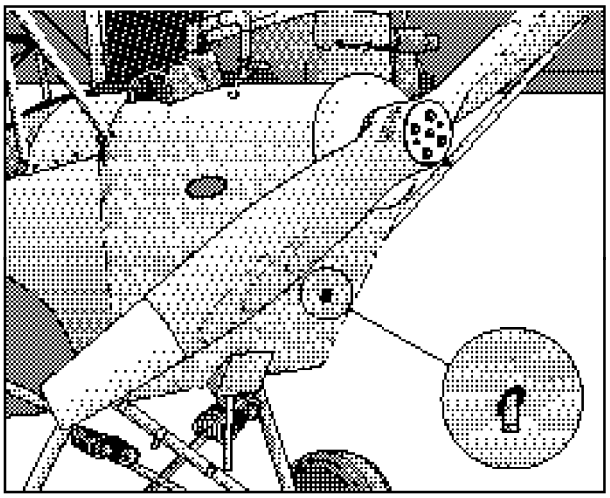

STOLP STARDUSTER

Stolp Starduster Model SA 300 — **Engine Oil Filter Failure 8550**

Immediately after starting the engine, all of the engine oil was lost. A Teledyne Continental Model E-225 engine was installed on this aircraft.

During an inspection, the oil filter (Champion, P/N CH48109) was found to have "burst." The gasket had been forced out of the groove, and the filter can was "domed out" at both ends. The entire engine oil system was checked for possible obstructions, and no obstructions were found. The submitter speculated the filter bypass valve failed to operate. The filter was removed and sent to the manufacturer for analysis.

Part total time not reported.

PROPELLERS AND POWERPLANTS

TELEDYNE CONTINENTAL

Teledyne Continental Models IO-360 and TSIO-360 Series — **Possible Defective Connecting Rods 8520**

Information for the following article was furnished by the FAA Aircraft Certification Office (ACE-115A) located in Atlanta, Georgia.

Some engines may be installed with connecting rods which are subject to Critical Service Bulletin (CSB) 96-13, dated November 14, 1996.

This CSB lists engines (by serial number) which have been installed with suspect parts. This CSB also states these parts could have been installed in other serial number engines of these models and series during "field maintenance." Also, these parts could have been installed on Rolls Royce "plc" Models IO-360 and TSIO-360 engines during maintenance.

An unknown number of these engines are in compliance with Service Bulletin (SB) M86-11, Revision 1, dated October 1, 1986, which covers the same subject. No further action is required for any engine in compliance with this SB.

The suspect connecting rods may be identified by a "raised circle C" and forging number "626119." The SB requires replacement of connecting rods with these markings having a measured beam width below .625 inch. Illustrations in the SB indicate where this measurement is to be taken.

It is recommended that anyone owning or operating one of these engines investigate maintenance records, log books, work orders, etc., to determine if their engine is in compliance with either of the references previously listed or could have suspect parts installed. If an engine serial number is listed, but the engine is not in compliance or the suspect parts could have been installed, compliance with CSB 96-13 is highly recommended.

TEXTRON LYCOMING

Textron Lycoming Model IO-540-D4A5 — **Camshaft Failure 8520**

This engine was installed in a Piper Model PA 24-260B aircraft.

The pilot reported a propeller overspeed condition during cruise flight at 6,500 feet altitude. The engine went to a maximum of 3,500 RPM. A safe landing was made at the nearest airfield.

An inspection disclosed the engine camshaft (P/N 75190) had broken between the forward bearing and the governor drive gear. This

allowed the propeller to decrease pitch, causing the overspeed condition. The submitter stated it appeared a previous crack in the camshaft originated at the "Woodruff" key slot and progressed to the point of failure. The engine maintenance records indicated the engine had been overhauled 550 operating hours prior to this failure. The reason for the previous engine overhaul was sudden stoppage. The submitter did not indicate whether the camshaft was replaced during the overhaul.

Part total time unknown.

Textron Lycoming Model O-540-L3C5D — **Broken Push Rod Retaining Springs 8530**

This engine had been overhauled and installed in a Cessna Model T182 aircraft.

After a test flight was conducted, a large amount of engine oil residue was found on the right side of the engine. An investigation revealed the push rod housing on the intake side of Number 1 cylinder was loose. When the rocker cover was removed, the push rod retaining spring (P/N LW14995) was found broken. The remaining rocker covers were removed for inspection, and the Number 5 cylinder push rod retaining spring was found cracked. Reference data for this subject are Superior Air Parts Service Letter 94-002 and Textron Lycoming Service Bulletin 519. Both of these documents address this problem. The submitter speculated the cause of these failures was "hydrogen embrittlement" of the metal, which was induced during the manufacturing process. Some of these springs are supplied by Superior Air Parts and are identified by "SL" preceding the part number. Please consult the previously referenced data for applicability.

Engine total time-1,866 hours, and the time since overhaul was 2.6 hours.

Textron Lycoming Model TIGO-541-E1A — **Crankshaft Failure 8520**

This engine was installed in a Piper Model PA 31P aircraft.

During an engine oil change, seven pieces of ferrous metal were found in the suction oil screen. There were also shavings of aluminum found in the suction oil screen. The ferrous metal pieces were approximately .43 inch long, .125 inch thick, and .25 inch wide.

The engine oil pan was removed, and a visual inspection revealed a corner was broken off of the center crankshaft counterweight blade. Approximately half of the counterweight blade bushing was missing, and this was determined to be the source of the ferrous metal found in the suction oil screen. The broken corner of the counterweight blade was not found. The crankcase was found to be the source of the aluminum shavings. As the broken counterweight "leading face" rotated, it "peeled" shavings from the crankcase.

Engine total time-2,900 hours. Engine time since overhaul-533 hours.

AIRWORTHINESS DIRECTIVES (AD'S)

AD'S ISSUED IN MARCH 1997

GENERAL AVIATION AIRCRAFT, ROTORCRAFT, AND RELATED ENGINES

97-05-06 Schweizer 269A, 269A-1, 269B, and TH-55A helicopters require inspection of main rotor thrust bearing.

97-06-03 Bell 214ST requires changing retirement life for main rotor mast.

97-06-02 Bell 214B, 214B-1, and 214ST require changing retirement life for the spider.

97-06-05 Avions Pierre Robin Model R2160 airplanes require repetitive inspection of weld area for cracks.

97-06-06 Raytheon (Beech) 90, 99, 100, 200, and 1900 series requires inspecting pilot and copilot chairs.

97-06-10 Raytheon (Beech) 76 airplanes require inspecting MLG "A" frame assemblies for cracks.

97-06-11 Raytheon (Beech) 35 Series requires inspecting ruddervator differential tail control rod assembly.

97-07-03 Piper PA31, PA31-300, PA31-325, PA31-350, and PA-31P requires inspecting nosewheel flange for cracks.

97-04-03 AlliedSignal TFE731 series turbofan engines require removal from service of certain first stage low pressure turbine seal plates.

97-04-12 Pratt & Whitney Canada PT6 series turboprop engines require inspection of compressor bleed-off valves.

97-05-12 General Electric Aircraft Engines CT7 series turboprop engines require eddy current inspection of disk holes.

97-06-14 General Electric Company CF34 series turbofan engines reduces allowable operating cyclic life limit for fan disks.

97-06-15 General Electric Company CF34 series turbofan engines reduces allowable operating cyclic life limit for affected high pressure compressor stage 1 rotor disks.

AIR NOTES

SPRING IS COMING!

With spring in the air, it is time to pay special attention to the birds and bees!

An infestation of living, creeping, crawling, and flying things can reek havoc for both aircraft and their occupants. An invasion of these critters into an aircraft has caused damage and/or destruction to virtually all aircraft systems. Even the smallest opening can be like "putting out the welcome mat" for these varmints to set up housekeeping.

Birds (especially) seem to have an affinity for engine cowling and fuselage sections big enough for their purpose. Even domestic animals (cats) have been known to "take up" residence in these places.

Other than "stopping up" orifices, vents, air intakes, and other openings, the material left behind by these intruders may be corrosive, toxic, and/or a fire hazard. Bees have been known to "swarm" an aircraft tail section causing a large change in the center of gravity. Probably the greatest damage is done by members of the rodent family (including squirrels). Rodents have a habit of eating or gnawing on almost any part of an aircraft, and (in a short amount of time) their "deposits" have been known to cause severe corrosion.

Some aircraft, when not in use, are parked outside on a parking ramp or stored in a

hangar. This is another case of "putting out the welcome mat" for all types of creatures. Before your aircraft is "asked to carry you and your passengers aloft, " a close inspection and an operational check of all systems should be completed.

Many methods to exclude these creatures have been devised. Some of these methods work and some don't. However, all aircraft owners are encouraged to take every measure possible to keep these creatures out.

If you discover a method that works, send it to us, and we will publish your method in this publication.

ALERTS ON LINE

We have received several requests to make the information contained in AC 43-16, General Aviation Airworthiness Alerts, available electronically. Therefore, this publication is now available through the FedWorld Bulletin Board System (BBS), via the Internet.

You may directly access the FedWorld BBS at telephone number (703) 321-3339. To access this publication through the Internet, use the following address.

http://www.fedworld.gov/ftp.htm

This will open the "FedWorld File Transfer Protocol Search And Retrieve Service" screen. Page down to the heading "Federal Aviation Administration" and select "FAA-ASI". The file names will begin with "ALT", followed by three characters for the month, followed by two digits for the year (e.g. "ALTJUN96.TXT"). The extension "TXT" indicates the file is viewable on the screen and also available to download.

Beginning July 1996, we are using the Adobe Acrobat software program format to upload this monthly publication. This change is necessary to include the illustrations which are associated with various articles. The file names will still begin with "ALT", followed by three characters for the month, followed by two digits for the year; however, the extension will be "PDF" (e.g. "ALTJUL96.PDF"). The extension "PDF" indicates it will be necessary to download the files for viewing. The Adobe Acrobat Viewer is available for download from the Internet (free of charge) and will allow the files to be read.

You may still access the "TXT" extension for issues of this publication prior to July 1996.

Also, available at this address are the Service Difficulty Reports which may be of interest.

The Regulatory Support Division (AFS-600) has established a "HomePage" on the Internet, through which the same information is available. The address for the AFS-600 "HomePage" is:

http://www.mmac.jccbi.gov/afs/afs600

Also, this address has a large quantity of other information available. There are "hot buttons" to take you to other locations and sites where FAA Flight Standards Service information is available. If you have any questions, our "E-mail" address follows.

Other requests have been received indicating a need to make the staff of this publication more available to our readers. To provide greater and more flexible access for you to offer information and ask questions, you may contact us by using any of the following methods.

Editor: Phil Lomax, AFS-640

Telephone Number: (405) 954-6487

FAX Number: (405) 954-4570 or
(405) 954-4748

Internet E mail address:
ga-alerts@mmacmail.jccbi.gov

Mailing Address:
FAA
ATTN: AFS-640 (Phil Lomax)
P.O. Box 25082
Oklahoma City, OK 73125-5029

We hope this will allow you to contact us by a means which will be convenient and save some of your time. We welcome the submission of aircraft maintenance information via any form or format. This publication provides an opportunity for you to inform the general aviation community of the problems you have encountered. The Service Difficulty Reporting (SDR) program also brings the problems to the attention of those who are able to resolve the problems. Your participation in the SDR program is vital so accurate maintenance information is available to the general aviation community.

FAA FORM 8010-4, MALFUNCTION OR DEFECT REPORT

For your convenience, FAA Form 8010-4, Malfunction or Defect Report, will be printed in every issue of this publication.

You may complete the form, fold, staple, and return it to the address printed on the form. (No postage is required.)

SUBSCRIPTION REQUEST FORM

For your convenience, a Subscription Request Form for AC 43-16, General Aviation Airworthiness Alerts, is printed in every issue.

If you wish to be placed on the distribution list, complete the form, and return it, in a stamped envelope, to the address shown on the form.

OMB No. 2120-0003

DEPARTMENT OF TRANSPORTATION
FEDERAL AVIATION ADMINISTRATION

MALFUNCTION OR DEFECT REPORT

OPER. Control No.	
ATA Code	
1. A/C Reg. No.	N-

Enter pertinent data	MANUFACTURER	MODEL/SERIES	SERIAL NUMBER
2. **AIRCRAFT**			
3. **POWERPLANT**			
4. **PROPELLER**			

5. SPECIFIC PART (of component) CAUSING TROUBLE

Part Name	MFG. Model or Part No.	Serial No.	Part/Defect Location.

6. APPLIANCE/COMPONENT (Assembly that includes part)

Comp/Appl Name	Manufacturer	Model or Part No.	Serial Number

Part TT	Part TSO	Part Condition	7. Date Sub.

8. Comments (Describe the malfunction or defect and the circumstances under which it occurred. State probable cause and recommendations to prevent recurrence.)

Optional Information:

Check a box below, if this report is related to an aircraft

☐ Accident; Date _____ ☐ Incident; Date _____

DISTRICT OFFICE	
OPERATOR IDENTIFIER	
OTHER	
COMMUTER	
FAA	
UPD.	
MFTWG	
USCH.	
OPER.	
REF. NTL.	
WRITTEN BY:	
TELEPHONE NUMBER:	( ) —

FAA Form 8010-4 (10-98) SUPERSEDES PREVIOUS EDITIONS

Use this space for continuation of Block 8 (*if required*).

U.S. Department
of Transportation

**Federal Aviation
Administration**

Flight Standards Service
Maintenance Support Branch
P.O. Box 25082
Oklahoma City, OK 73125

AFS-640

Official Business
Penalty for Private Use $300

NO POSTAGE
NECESSARY
IF MAILED
IN THE
UNITED STATES

BUSINESS REPLY MAIL

FIRST CLASS PERMIT NO. 12438 WASHINGTON, D.C.

Federal Aviation Administration
AFS-640 (Alerts)
P.O. Box 25082
Oklahoma City, OK 73125-5029

SUBSCRIPTION REQUEST FORM

ADVISORY CIRCULAR (AC) 43-16, GENERAL AVIATION AIRWORTHINESS ALERTS

Please use this request to subscribe to AC 43-16 or to change your address if you are presently on the mailing list. Once your name has been entered, you will continue to receive this publication until you request your name be removed or a copy is returned because of an incorrect address.

Because this mailing list is independent of other FAA mailing lists, it is necessary that you notify us when your address changes. (Our address is on the following subscription request.) If you are presently receiving this publication it is **NOT** necessary to send another subscription request. The following subscription request may be duplicated, as necessary. **TELEPHONE REQUESTS WILL ALSO BE ACCEPTED; THE TELEPHONE NUMBER IS (405) 954-6487. THE FAX NUMBERS ARE: (405) 954-4748 and/or (405) 954-4570.**

AC 43-16 SUBSCRIPTION REQUEST

If you would like to **BEGIN** receiving AC 43-16, or **CHANGE** your address, please complete the following:

PLEASE PRINT INFORMATION LEGIBLY, INCLUDE YOUR ZIP CODE, AND THE DATE OF YOUR REQUEST.

NAME:_____

ADDRESS:_____

_____

_____

ZIP CODE_____

DATE:_____

CIRCLE ONE OF THE FOLLOWING:

1. This is a **NEW** subscription.
2. This is an **ADDRESS CHANGE**.

SEND **ONLY ONE** SUBSCRIPTION REQUEST TO THE FOLLOWING ADDRESS:

FAA, Regulatory Support Division
ATTN: AFS-640 (Phil Lomax)
P.O. Box 25082
Oklahoma City, OK 73125-5029

If you require more than one copy of AC 43-16, it may be reproduced.

U.S.Department
of Transportation

Federal Aviation Administration

Maintenance Support Branch
ATTN: ALERTS, AFS-640
P.O. Box 25082
Oklahoma City, OK 73125-5029

AFS-640

Official Business
Penalty for Private Use $300

BULK MAIL
POSTAGE & FEES PAID
Federal Aviation Administration
PERMIT No. G44