U.S. Department of Transportation
Federal Aviation Administration

General Aviation Airworthiness Alerts

AC No. 43-16

ALERTS

ALERT NO. 231
OCTOBER 1997

Improve Reliability-Interchange Service Experience

CONTENTS

AIRPLANES

AEROSPATIALE 1
AMERICAN CHAMPION 2
BEECH 2
CESSNA 5
MOONEY 8
PIPER 8

HELICOPTERS

AGUSTA 11
AMERICAN EUROCOPTER 11
BELL 12

AGRICULTURAL AIRCRAFT

AYRES 13
PIPER 13

AMATEUR, SPORT, AND EXPERIMENTAL AIRCRAFT

AMATEUR-BUILT GLIDER 13
CLASSIC AIRCRAFT CORPORATION 14
HOME BUILT 14
NIEUPORT 14
SEAREY 14
SKYBOLT 15

PROPELLERS AND POWERPLANTS

TURBOMECA 15

AIR NOTES

AIRWORTHINESS DIRECTIVES (AD'S) ISSUED IN AUGUST 1997 16
ALERTS ONLINE 16
ELECTRONIC AVAILABILITY OF INFORMATION 17
FAA ENFORCEMENT ACTIONS (VIOLATIONS) 17
SUSPECTED UNAPPROVED PARTS SEMINAR 18
FAA FORM 8010-4, MALFUNCTION OR DEFECT REPORT 19
SUBSCRIPTION REQUEST FORM 19

Contents of this publication are informational only. Due to the need for extensive distribution of this publication, only one copy is provided to an addressee; however, this publication may be duplicated.

U.S. DEPARTMENT OF TRANSPORTATION
FEDERAL AVIATION ADMINISTRATION
WASHINGTON, DC 20590

GENERAL AVIATION AIRWORTHINESS ALERTS

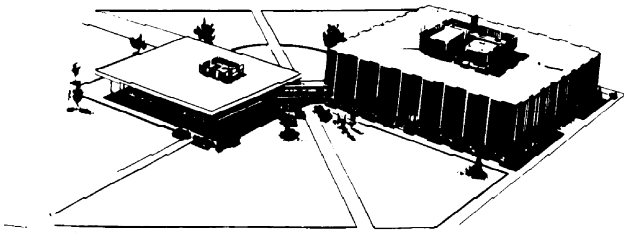

FLIGHT STANDARDS SERVICE
Mike Monroney Aeronautical Center

The General Aviation Airworthiness Alerts provide a common communication channel through which the aviation community can economically interchange service experience and thereby cooperate in the improvement of aeronautical product durability, reliability, and safety. This publication is prepared from information submitted by those of you who operate and maintain civil aeronautical products. The contents include items that have been reported as significant, but which have not been evaluated fully by the time the material went to press. As additional facts such as cause and corrective action are identified, the data will be published in subsequent issues of the Alerts. This procedure gives Alerts' readers prompt notice of conditions reported via Malfunction or Defect Reports. Your comments and suggestions for improvement are always welcome. Send to: FAA; ATTN: Designee Standardization Branch (AFS-640); P.O. Box 25082; Oklahoma City, OK 73125-5029.

AIRPLANES

AEROSPATIALE

Aerospatiale Model TB-9 Tampico — **Nose Landing Gear Mount Tube Damage 3221**

During a scheduled inspection, a small blister in the paint led to finding a severe defect in the nose landing gear attachment to the airframe.

The paint blister was found on an engine mount tube. When it was probed, severe corrosion was found underneath. The mount tube wall thickness had been penetrated by the corrosion, and the tube broke while it was being removed. The submitter stated it appeared the corrosion originated on the inside of the tube and progressed through the wall thickness to the outside.

Part total time-4,933 hours.

Aerospatiale Model TBM 700 — **Defective Fuel Pressure Transducer 2844**

The pilot reported that, at times, the indicated fuel pressure would drop to zero during flight.

Troubleshooting the indicating system revealed the fuel pressure transducer (P/N Z00.M7809178074) was operating intermittently. The submitter stated this was the third such failure he had experienced. The first transducer failed after 155 hours of operation, the second unit lasted 120 hours, and this unit lasted 203 hours of operation.

Part total time as previously stated.

AMERICAN CHAMPION

American Champion Model 8GCBC Scout — **Leaking Fuel System Drains 2810**

During an inspection, all four fuel tank "quick drains" were found leaking. Each of the "quick drain" seals was found clogged with aluminum metal cuttings. The submitter believed these cuttings were left inside the fuel tanks during their manufacture and migrated into the "quick drains." Also, metal cuttings were found in the main fuel system strainer. The submitter recommended the entire fuel system be drained and flushed to purge it of debris and contamination.

Part total time-36 hours.

BEECH

Beech Model 19A Musketeer Sport — **Defective Engine Oil Pump 8550**

This aircraft had a Textron Lycoming Model O-320E2C engine installed. While complying with Airworthiness Directive (AD) 96-09-10C in conjunction with a scheduled inspection, excessive "wobble" was noted at the engine crankshaft idler gears.

The engine accessory case had been removed, and the left side idler gear shaft was found to have significant free play. When the idler gear and shaft (P/N LW-13796) were removed, the lower bolt (P/N STD-2167), used to secure the idler gear shaft mount (P/N LW-13797), was found broken. Evidence indicated that the bolt had failed due to shear stress at the junction of the shaft mount and the engine crankcase. The threaded portion of the bolt remained in the crankcase, and the bolt head and shank could not be found. This allowed the idler gear shaft to move and work on the aluminum crankcase and enlarge the opening through which oil passes to lubricate the idler gear. The submitter speculated that this failure may have been caused by overtorquing of the bolt during installation.

Part total time-5,570 hours.

Beech Model A36 Bonanza — **Wheel Brake Failure 3242**

The pilot reported that after heavy brake application, the right wheel brake failed.

An inspection revealed that the brake disk (P/N 164-25E) had separated from the wheel assembly. It appeared the brake disk had been "torn" loose at the mount holes. No cause or cure was offered for this defect; however, the submitter stated this failure was identical to one reported in the May/June edition of Aviation Maintenance Technician magazine.

Part total time-1,232 hours.

Beech Model 58 Baron — **Nonstandard Bulkhead Repair 5510**

During a scheduled inspection, the horizontal stabilizer bulkhead (P/N 002-440023-77) was found cracked.

This bulkhead was located at Fuselage Station (FS) 257.6 adjacent to the spar attachment points. Several of the cracks had been "stop drilled" as a repair. The submitter stated that in accordance with Beech Service Instruction (SI) 990, revision 2, a reinforcement kit (P/N 55-4030-5S) is required for repair of defects such as those found in this case. It was recommended this area be given close attention during scheduled inspections and that repairs be accomplished in accordance with SI 990. Consult all appropriate technical data for complete details and requirements.

Part total time-5,084 hours.

Beech Model 58 Baron — **Rudder Interconnect Tube Damage 2720**

During a 100-hour inspection, the rudder interconnect tube was found chafed and worn.

A screw used to attach the floor panel was excessively long and had worn a hole through the wall thickness of the interconnect tube (P/N 002-410034-3). The hole was approximately .375 inch long, and the tube was scored for a distance of 1.5 inch. (Refer to the following illustration.) Each time the rudder linkage was moved the screw threads wore into the tube. The submitter stated the screw had been installed at the wrong location and was too long. This operator had found this defect on several other aircraft, and the defect was not seen as uncommon. It was suggested that more care be taken to ensure component installation does not interfere with other moving (or stationary) parts.

Part total time-207 hours.

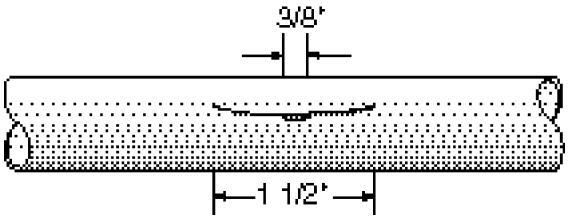

Beech Model C90A King Air — **Rudder Bearing Failure 2720**

The submitter found the rudder bearing (P/N MS24461-4) "frozen" on 5 of the 18 aircraft in this operator's fleet.

The bearings displayed signs of corrosion, a lack of lubrication, and they would not move. It was stated that chapter 12 of the maintenance manual does not require lubrication of these bearings. The report did not state the position in which the unserviceable bearings were installed or if they were a "sealed type" of bearing. It would be wise to closely inspect all of the rudder bearings during scheduled inspections and maintenance.

Part total times ranged from 2,000 to 5,000 hours.

Beech Model F90 King Air — **Fuel Leak 2820**

After the aircraft had been parked in the hangar a few hours (for other maintenance), fuel was noticed coming from the right engine nacelle.

The fuel was coming from the lower nacelle heated fuel vent. An investigation determined that the fuel was leaking past the auxiliary fuel tank flapper valve. Further inspection and disassembly revealed that the flapper valve plate (P/N 101-920067-11) hinge attachment rivets were loose and worn. This allowed the valve plate to "unseat" and the fuel to pass under gravity pressure. Any fuel leakage from these vents should be thoroughly investigated. As indicated by the number of operating hours, this defect may have been caused by "old age."

Part total time-6,100 hours.

Beech Model 99 Airliner — **In-Flight Departure Of Pilot's Auxiliary Hatch 5300**

Information for this article was furnished as FAA Safety Recommendation 97-059, from the FAA Aircraft Certification Office located in Wichita, Kansas.

The FAA has received a report stating the pilot's auxiliary hatch departed the aircraft. The probable cause was that the latch was not properly secured. However, the predeparture checklist did include limited instructions to check the hatch for security.

It is recommended that the pilot review the Airplane Flight Manual contained within the Pilot's Operating Handbook before starting engines and before takeoff. Also, the maintenance manual requires an inspection of the pilot's compartment hatch every 100 hours of time-in-service.

Beech
Model 100
King Air

Air Conditioner
System Failure
2100

The pilot reported that the air conditioning system failed during flight. The 5-amp air conditioner blower circuit breaker had opened and could not be reset.

An investigation by maintenance personnel disclosed that the electrical wiring for the radar unit and the air conditioner control box had "melted" together. After considerable research, which included contact with a Beech technical representative, it was found that the "air conditioner soft start resistor" had overheated, causing failure of the wire insulation. The 1-amp circuit breaker in the air conditioner control box (P/N 100-364178-1) had been replaced with a 2-amp circuit breaker. This action had been taken by an unknown person at some time in the past. The aircraft maintenance records had no entry for this or any related maintenance.

Installation of the 2-amp circuit breaker caused the relay in the start control circuit to stay on-line longer than it should have, which resulted in an overheat condition of the resistor. In addition to changing the parts and wiring which were obviously damaged, the Beech representative suggested replacing the 50-degree outside air temperature switch and the 35-degree thermal switch. Also, the Beech representative stated that the 2-amp circuit breaker in the control box overrode the control box "built in" protection. Although the system functioned for several years, one of the parts malfunctioned and caused the resistor to overheat. Although no specific identification was given, the submitter stated that Beech issued a "Communiqué" covering this subject.

Part total time unknown.

Beech
Model 400
Beechjet

Main Landing Gear
Door Cracks
5280

Information for this article and the two following articles was reported by the same submitter. All of these defects were found on the same aircraft. Cracks were found in the upper channel of both main gear doors during a scheduled inspection.

The cracks were located just above the forward door hinge. After removing the channels, the forward hinge (P/N 45A30381) was also found cracked. The submitter stated this problem is identified in Beech Service Communiqué 26 and recommended this document be consulted for specific details.

Part total time-3,502 hours.

Beech
Model 400
Beechjet

Landing Gear
Hydraulic System
Failure
3230

During a ground test of the landing gear system, the nose gear collapsed.

Prior to the test, all three landing gear were confirmed to be in the "down-and-locked" position. When hydraulic pressure from an external source was applied to the system, the nose landing gear immediately retracted. An investigation revealed that the landing gear control system was functioning normally. The cause was found to be in the landing gear hydraulic powerpack (P/N 45AS65022-7). The "spool valve" for the nose gear had stuck in the "gear-up" position. This caused hydraulic pressure to be applied to the retraction side of the nose gear cylinder.

Three cheers for the maintenance folks who discovered and corrected this defect before it

had the opportunity to cause serious personal injuries!

Part total time-3,502 hours.

Beech
Model 400
Beechjet

Emergency Landing Gear Extension Failure
3230

During a test of the emergency landing gear extension system in conjunction with a scheduled inspection, the left main gear failed to extend.

An inspection disclosed that the left main gear door open (emergency) cable (P/N 45A38671-31/41) was broken. The failure occurred at the door end of the cable. The submitter stated that if it had been necessary to use the emergency gear extension system in flight, a two-point (nose and right main) landing would have resulted.

Part total time-1,103 hours.

CESSNA

Cessna
Models All Single-Engine Aircraft With Turbocharged Teledyne Continental Engines

Engine Turbocharger Oil Hose Failure
2820

Information for this article was furnished as FAA Safety Recommendation 96-188, from the FAA Aircraft Certification Office located in Wichita, Kansas.

The FAA continues to receive reports of failure of the engine oil hoses attached to the turbocharger and wastegate. Cessna recommends that all engine hoses be replaced every 5 years. The most recent hose failure report indicates that the engine suffered loss of engine oil due to a ruptured hose, and the engine had been overhauled less than 12 months prior to this occurrence. This hose had been in service over 15 years when the engine was overhauled.

The FAA issued Airworthiness Directive (AD) 88-22-07 as a result of the numerous hose failure reports received for these aircraft. The FAA has received a recommendation to issue additional AD's to limit, by regulation, the life of all engine compartment hoses to the currently recommended period of 5 years.

Inspection personnel are encouraged to recognize the importance of maintaining an acceptable service life of all engine compartment hoses.

Cessna
Model 140A

Wing Spar Carry-Through Corrosion
5711

After the right wing was removed for painting, an inspection of the fuselage rear spar carry-through structure revealed severe corrosion.

The area of damage was between the front face of the rear wing spar and the bulkhead to which it was attached. The most severe corrosion damage was located approximately .5 inch inboard of the rear wing spar attachment block which was bolted to the spar carry-through. At this point, the corrosion consumed the entire thickness of the bulkhead. Five of the 10 rivets used to attach the bulkhead to the spar had missing heads.

The submitter stated this damage was caused by entrapment of water and other contaminates, and the structural members were installed without corrosion treatment. Another contributing factor was the location of an electrical system ground attached to the bulkhead.

It was recommended that the manufacturer provide procedures to allow better drainage in this area and corrosion treatment of structural members during installation. Also, it was suggested that inspection access to this area be provided so that it may be properly inspected without wing or other major component removal. Primary aircraft

structure should be avoided as a location for an electrical system ground attachment.

Part total time not reported.

Cessna Model 172N — **Questionable Information And Maintenance**

An anonymous report was received recently from a pilot/owner/A&P mechanic, stating a problem which could have a negative impact on operational safety and airworthiness of the aircraft.

The submitter stated finding fuel lines "riding hard" or chafing against the aircraft structure at various points. The chafing locations were not identified other than points where fuel lines passed through lightening holes in the aircraft structure. Chafing fuel lines do present a serious safety problem which deserves correction at the earliest opportunity. However, the cure should not be the cause of another safety-related defect.

In this case, the submitter sought guidance from an engineer/A&P who advised the owner to "...just enlarge the holes to clear the fuel lines."

First of all, chafing fuel lines, or any other aircraft plumbing, is an anomaly and not a normal condition! If a systemic chafing problem exists, it should be documented and reported so that the problem can be addressed by the FAA and the manufacturer.

Secondly, without current and proper technical data one should not arbitrarily enlarge lightening holes or any other aircraft structure to provide chafing clearance. A Cessna representative was contacted concerning this subject and stated that "reforming the lines might be a better solution than a possible compromise of the aircraft's structural integrity." Modification of the aircraft's structure should never be done without using approved technical data and procedures.

Cessna Model 177RG Cardinal — **Engine Induction Air System Icing Problems 7160**

Information for the following article was submitted as FAA Safety Recommendations 96.401 and 96.402 by the FAA Aircraft Certification Office located in Wichita, Kansas.

The FAA continues to receive reports of induction icing problems associated with fuel injection systems having metering components on which impact ice may accumulate. (Reference Title 14 of the Code of Federal Regulations (14 CFR) part 23, section 23.1093(a)(5).) In some situations, the FAA has written airworthiness directives (AD's) on aircraft certificated to earlier regulations to require compliance with the intent of section 23.1093(a)(5). However, the reports of induction icing problems on some aircraft models, equipped with the type of fuel metering systems described above, are not numerous enough to justify design changes to meet the later regulations.

When in-flight engine induction icing problems are encountered on aircraft that do not meet the intent of section 23.1093, the pilot has no choice except to descend to warmer air. The cause of induction icing problems is often that the pin size impact tubes, which are upstream of the throttle plate, become obstructed with frozen water droplets that pass through the induction air filter. When these tubes become obstructed, fuel flow is rescheduled to idle fuel flow when the throttle plate is in the normal cruise or takeoff position.

Pilots, operators, and mechanics are encouraged to submit accurate, descriptive reports of induction icing problems on aircraft equipped with fuel injection systems having metering components on which impact ice may accumulate.

Cessna Model R182 Skylane — **Defective Nose Landing Gear 3230**

During other maintenance, a technician discovered the nose landing gear actuator attachment fitting was broken.

The upper right leg of the fitting (P/N 2243002-2) was broken at the attachment hole. A review of the aircraft maintenance records revealed the aircraft had been involved in three different gear-up landings. The nose gear area had sustained substantial damage which had been repaired each time; however, there was no mention of the actuator attachment fitting being replaced. The submitter speculated the fitting was damaged in one or more of the three landing incidents and had been overlooked during previous repairs. Also, the submitter stated that Cessna Model T303 aircraft use this same part to which Airworthiness Directive (AD) 91-11-09 applies.

Part total time-2,077 hours.

Cessna Model 182Q Skylane — **Engine Throttle Control Failure 7322**

The pilot reported the throttle stuck at full power while preparing for a descent. An uneventful landing was made, and the engine was shut down by using the mixture control.

An inspection disclosed that the carburetor "butterfly" valve was stuck in the "full open" position and would not move toward the "closed" position. The carburetor "full open" stop was excessively worn, which allowed the butterfly valve to travel further than normal. The valve pin was "jammed" inside the carburetor body, and locked the valve plate in position.

Part total time unknown.

Cessna Model T210 Centurion — **Engine Mount Damage 7120**

While the number 2 cylinder on the engine was being changed, the left rear engine mount was found damaged.

The engine mount had been severely chafed by the propeller control cable. The damaged area was adjacent to the "cut out" for the barrel nut. When the engine intake and exhaust systems are installed, this area is very difficult to see. The propeller control cable had not been properly supported when it had been installed, and the submitter stated there were no provisions for support of the cable. The engine mount was changed, and the propeller control cable was rerouted and secured to prevent future chafing and interference.

Part total time-580 hours.

Cessna Model 425 Conquest — **Erroneous Main Landing Gear Indication 3260**

It was reported that the right main landing gear indicated "unsafe" when it was extended. The landing gear was cycled several times with the same result.

While troubleshooting the system, the downlock switch, located in the landing gear actuator (P/N 9910136-6), was found to operate intermittently. After replacing the switch, the system operated and indicated normally.

Part total time-2,663 hours.

Cessna Model 550 Citation — **Power Brake Pump Pressure Switch Failure 3242**

When the aircraft taxied to the parking ramp, the mechanic noticed that the power brake

pump, which normally cycles every minute or so to recharge the accumulator, had stopped cycling.

The cause of this problem was traced to failure of the pressure switch (P/N 1206P27) to be in the open position. The system operated normally after replacement of the switch. The operator/submitter stated this switch has failed 15 times over the past 7 years on their fleet of four like aircraft. The failure rate for this part is approximately one failure every 3 months. Also, the operator noted that the price of this part has doubled over the 7-year period.

Part total time-492 hours.

Cessna Model 560 Citation — **Tire Failure 3244**

During a normal maintenance preflight, the technician discovered the left main landing gear tire tread was separating from the casing.

The tire (Aviator 12 ply, P/N 028-700) pressure and tread wear were normal. The condition of this tire indicated that failure was eminent. Thanks to an observant A&P mechanic, a possible serious incident was averted.

Tire total time-258 hours with 263 landing cycles.

MOONEY

Mooney Model M 20C Ranger — **Empennage Structural Corrosion 5500**

During a scheduled inspection, severe corrosion was found throughout the empennage structure.

Supporting structures and attachment fasteners were “one big ball of corrosion.” The submitter stated it is difficult to detect corrosion in this area in its early stages. Ninety percent of the attachment rivets had failed due to the corrosive action. This aircraft was approximately 32-years old and 22 of those years were spent in a corrosive environment (salt air). It was recommended that aircraft subjected to long term operation in a corrosive environment should be inspected and treated for corrosion on a frequent and regular basis.

Part total time not reported.

PIPER

Piper Models PA 12, 14, 18, 20, and 22 — **Wing Flap And Aileron Bellcrank Cracks 2710 and 2750**

The submitter of this report found cracks in the wing flap and aileron bellcranks. This defect has been found on all of the aircraft models listed.

In some of the aircraft only the wing flap bellcrank was cracked; however, other aircraft had the aileron bellcrank cracked as well. Airworthiness Directive (AD) 49-27-02 and Piper Service Bulletin 109 deal with this subject for PA 12 and 14 series aircraft. They may also contain data useful on the other models previously listed. The cracks usually occur at the flight control or cable attachment ends of the bellcrank adjacent to the attachment hole. (Refer to the following illustration.) The submitter recommended these bellcranks be closely inspected each time the wing covering is removed and after severe wind damage to the wings or flight controls. It was suggested this defect may be caused by overtorquing the attachment bolt.

Part total time not reported.

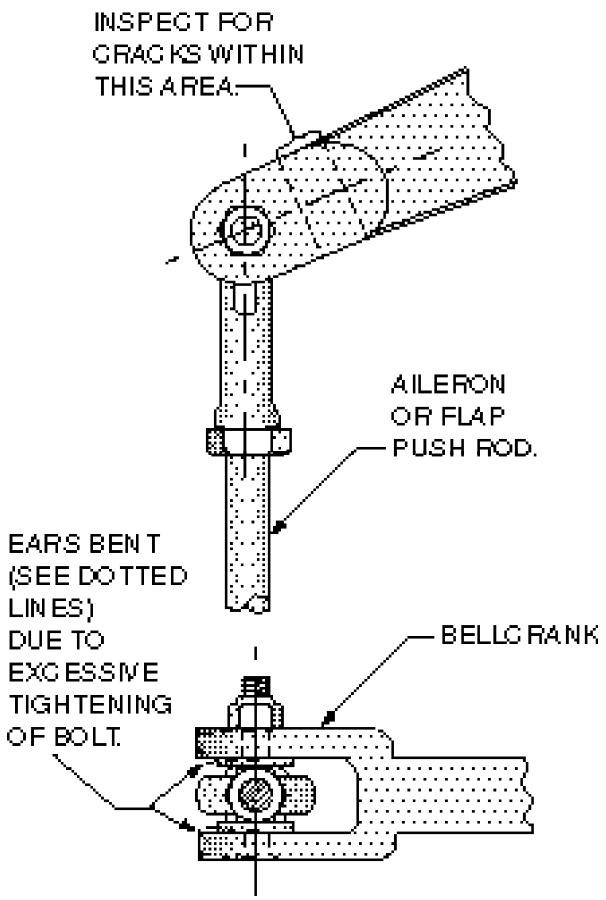

Piper
Model PA 28-180
Cherokee

Carburetor Fuel Leak
7322

During an annual inspection, fuel was found seeping from the lower area of the carburetor.

An investigation revealed that a bolt, used to mount the induction air box to the carburetor, was too long and had broken the carburetor bowl. The submitter recommended that maintenance personnel take precautions to avoid interference of bolt and screw shanks with other installations.

Part total time-1,079 hours.

Piper
Model PA 28R-180
Arrow

Wing Spar Corrosion
5712

During an annual inspection, severe corrosion was found on the left wing.

The corrosion was concentrated on the upper cap of the main spar in the area of the forward flange. This area is very difficult to properly inspect because it must be inspected through the wheel well inspection panel using an inspection mirror and flashlight. The severity of corrosion damage in this case required wing removal and replacement of the spar (P/N 67070-02). The submitter did not offer a cause or cure for this defect.

Part total time-4,500 hours.

Piper
Model PA 28R-201T
Turbo Arrow

Turbocharger
Exhaust System
Failure
8120

The pilot reported losing EGT and landing gear indications during flight. It was suspected the turbocharger was not performing properly. A safe landing was made, and maintenance personnel were summoned.

During an inspection, a turbocharger exhaust clamp bolt was discovered to be missing. It was believed the clamp bolt broke and was lost during flight. A wire bundle, containing seven wires for the EGT and landing gear position indicator system, had been burned and severed by exposure to high temperature turbocharger exhaust gases. The submitter speculated this defect was caused by metal fatigue due to age.

Part total time-2,752 hours.

Piper
Model PA 30
Twin Comanche

Defective Rudder
Mount Alignment
5540

Information for the following article was furnished by the FAA, Aircraft Certification Office, ACE-117A, located in Atlanta, Georgia.

To eliminate the recurring inspection requirements of Airworthiness Directive (AD) 74-16-08, the aircraft owner elected to install a parts kit (P/N 760-783) in accordance with the AD and Piper Service Letter 679.

To accomplish the installation, it was necessary to remove the rudder. When the rudder control cables were disconnected at the bellcrank, the rudder immediately deflected full right and banged against the stop. The middle rudder hinge bracket was found to be misaligned with the top and bottom hinge brackets. The resulting force from the misalignment was believed to have contributed to a crack in the top hinge bracket (P/N 20707-8). Also, it was speculated this force imposed a spring action potential which caused the rudder to go full travel to the right when the control cables were disconnected. The crack in the top hinge bracket went around the hinge bearing and was approximately 90 percent through the bracket.

Part total time not reported.

Piper
Model PA 31-350
Chieftain

Defective Elevator Hinge Bearing
2730

During a scheduled inspection, a loud "clunking" sound was heard while lifting up on the elevator control surface. An investigation revealed the inner ball of the hinge bearing (P/N 764054) and the retaining bolt moved "loosely" up and down when the elevator surface was moved. While removing the bearing, it fell apart. The submitter stated this was the second defective elevator bearing he had found.

The bearing damage in this case may have been the result of corrosion, wear, and/or age.

Part total time not reported.

Piper
Model PA 31-350
Chieftain

Engine Fuel Leakage
2830

During flight, the pilot noticed that the left engine was consuming an excessive amount of fuel. During a "precautionary landing," the left engine caught fire and was shut down.

Maintenance personnel inspected the engine fuel system using pressure from the boost pump. Fuel was found leaking from the seam on the engine driven fuel pump (Romec P/N RG9080J7A). Evidently, the leaking fuel did not ignite until the airspeed was reduced for landing. The submitter did not offer a cause or cure for this defect.

Part total time-104 hours.

Piper
Model PA32R-301
Saratoga

Defective Nose Landing Gear Downlock
3230

The pilot reported the nose landing gear would not indicate "down and locked" when the selector was placed in the "down" position. All attempts to gain a "down and locked" indication failed, and the aircraft was landed uneventfully.

An inspection by maintenance personnel disclosed the downlock bolt (P/N AN23-19A) was broken, the downlock mechanism was bent, and the rod-end was seized. The submitter stated this appears to be a common occurrence and suggested the manufacturer authorize the installation of a stronger bolt in the downlock.

Part total time not reported.

Piper
Model PA44-180
Seminole

Carburetor Heat Box
7160

The submitter of this report operates a fleet of six of these aircraft and has experienced a repetitive problem concerning the carburetor heat box (P/N 86245-834).

The cover for the carburetor heat box is attached using a pair of screws on one side and a tongue-and-slot arrangement on the other. The slots have been found to wear thin and fail at an alarming rate. When this occurs, the cover usually separates from the aircraft.

After a short time the clamps holding the air box fail, and the entire air box falls to the bottom of the engine cowling. The submitter has experienced an average failure time in this area of less than 100 hours. This area may deserve closer attention during scheduled inspections and maintenance.

Part total time less than 100 hours.

Piper
Model PA46-350P
Malibu Mirage

Fuel Tank Leak
2810

It was reported that fuel was leaking from the right main landing gear wheel well.

An investigation disclosed the fuel was coming from the right fuel collector tank (P/N 84029-017). A seam weld at the inboard edge was found cracked approximately 2 inches. The submitter observed that with the landing gear retracted, the wheel brakes were directly behind the collector tank. This created a very hazardous operational condition which could have resulted in a catastrophic fire. It was speculated the crack in the fuel tank seam could have been caused by "oil canning" or excessive head pressure when the tank was full.

Part total time-79 hours.

HELICOPTERS

AGUSTA

Agusta
Model A109C

Main Transmission Failure
6320

The pilot reported that approximately 5 minutes into a flight, the main rotor transmission chip light illuminated and could not be extinguished. As a precaution, the helicopter was landed at the departure site.

An inspection of both chip plugs disclosed four large metal chips on the bottom plug. The transmission filter was inspected and found to contain an excessive amount of metal filings. The 200 hour oil and filter change had been accomplished approximately 23 hours prior, and no abnormalities were noted. When the transmission was opened, excessive "spalling" of the "input quill" and the "Gleason crown gear" was found. A suspected crack on the "input quill teeth" had not been confirmed at the time of this report. The cause and cure for this defect was not offered by the submitter.

Part total time-1,178 hours.

AMERICAN EUROCOPTER

American Eurocopter
Model 350B2

Tail Rotor Bearing Failure
6720

Information for this article was furnished by Mr. Lewis Smith (an Aviation Safety Inspector, Airworthiness) with the FAA Flight Standards District Office (FSDO) located in Baton Rouge, Louisiana.

During a daily visual inspection, the bearing in the outboard end of the tail rotor pitch change rod was found almost completely separated from the housing. (Refer to the following illustration.)

The pilot of the previous flight did not notice any abnormalities in the operation of the tail rotor control system. It appeared that the bearing was one flight away from a total failure, which could have resulted in complete loss of the helicopter and its occupants. This operator maintains a large fleet of like aircraft, and this is the second such failure he has experienced. The first occurrence was found as the causal factor during an accident investigation. The pitch change link has been retained for metallurgical analysis and when the results are received, they will be printed in a future edition of this publication.

The submitter feels very strongly that this should be the subject of an Airworthiness Directive (AD). All evidence and information have been sent to the FAA Rotorcraft

Certification Office located in Fort Worth, Texas, for appropriate action.

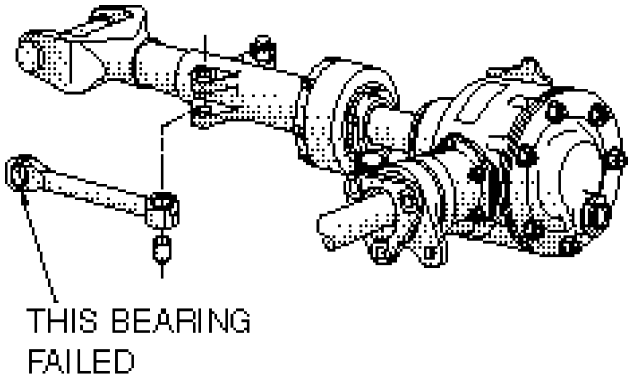

BELL

Bell
Models 206A, 206B, TH-57, TH-67, 206L, 206L-1206L-3, and 206L-4

Main Rotor Hub Pillow Block Retention Hardware
6220

Information for this article was provided by the FAA Rotorcraft Certification Office, ASW-170, located in Fort Worth, Texas.

Bell Helicopter Textron has issued Alert Service Bulletin (ASB) number 206-97-90 dated June 20, 1997. This ASB cancels and supersedes Service Letter 206-190; Technical Bulletins 206L-78-7, 206L-80-45, 206-78-4, and 206-80-34; and Alert Service Bulletins 206L-92-79 and 206-92-66.

Bell has received reports of main rotor hub pillow block retention bolts losing their torque. It has been determined that the pad (P/N 206-011-102-005) bonded to the pillow block may compress and contribute to the loss of retention bolt torque. This ASB was issued to provide an improved pad bonded to both sides of each pillow block mounting ear. A longer bushing provides a positive clamp across the yoke and pillow block joint. The clamp-up between the yoke and pillow block is shimmed for an improved joint. The joint is further improved by locating the pillow block bolt head inboard, and improved accessibility simplifies torquing the nut.

Bell
Model 407
Serial Numbers 53000 through 53013, 53015 through 53022, 53026 and 5302

Tail Rotor Bellcrank Rod-End Bearing Interference
6500

Information for this article was provided by the FAA Rotorcraft Certification Office, ASW-170, located in Fort Worth, Texas.

Bell Helicopter has determined that interference may occur between the bellcrank assembly (P/N 406-001-704-101) and the rod-end bearing in the tail rotor rod assembly (P/N 406-012-129-101) during operation of the tail rotor pedals. Bell has issued Technical Bulletin number 407-97-5, dated May 15, 1997, which addresses this problem.

Part I of this bulletin describes a one-time visual inspection to determine if the part was manufactured from plate stock or forging. Part II gives instructions for rework of the bellcranks made by forging.

Bell
Model 407
Serial Numbers 53000 through 53138, and 53140 through 53142

Main Rotor Pitch Link Retention Hardware
6710

Information for this article was provided by the FAA Rotorcraft Certification Office, ASW-170, located in Fort Worth, Texas.

Bell Helicopter has issued Alert Service Bulletin (ASB) number 407-97-10, dated July 29, 1997, which calls for the replacement of the main rotor pitch link retention hardware.

It has been found that because of manufacturing tolerances, it is possible that one additional washer may be required under the nut of the pitch link retention bolts. The added washer ensures the correct torque is applied to the nut and that the cotter pin hole is aligned without the nut threads bottoming on the bolt shank.

This ASB was issued to replace all hardware that attaches (four each) the pitch link assemblies to the swashplate and to the pitch horn or the main rotor hub.

AGRICULTURAL AIRCRAFT

AYRES

Ayres
Model S2R

Priority Airworthiness Directive
5700

This information was submitted by the FAA Flight Standards District Office (FSDO) located in Oklahoma City, Oklahoma. Accompanying the information was a request to disseminate this urgent safety information through this publication. This FSDO has issued a "Safety Alert" dated August 20, 1997, to the operators within their jurisdiction.

Priority Letter Airworthiness Directive (AD) 97-13-11 was issued on June 20, 1997. This AD covers all of the S2R series aircraft and resulted from the findings of an accident investigation. (Refer to the AD for specific applicability.)

The aircraft accident resulted from separation of the left wing during flight. The investigation revealed nine occurrences of fatigue cracking in the lower spar caps. These cracks emanated from .25 inch and .3125 inch fastener holes in the left lower spar cap.

The urgency of this situation dictates that all operators of the affected aircraft comply with the requirements of this AD immediately. For specific applicability and requirements, please refer to AD 97-13-11.

PIPER

Piper
Model PA 36-375
Pawnee Brave

Main Landing Gear Failure
3213

The aircraft was parked in the hangar and was being prepared for flight. The pilot was on the wing to check the engine oil when the left main landing gear broke.

The main gear strut broke cleanly adjacent to the fuselage. There was no evidence of corrosion damage or a pre-existing crack in the area of the break. All operators of like aircraft are urged to inspect this area closely at every opportunity.

Part total time-2,420 hours.

AMATEUR, SPORT, AND EXPERIMENTAL AIRCRAFT

AMATEUR-BUILT GLIDER

Amateur-Built Glider
Model BG-12A

Wing Failure
5711

During a towing operation, the wing center section spar failed.

The spar failed adjacent to the right fuselage attachment point. Evidence indicated the wood spar had deteriorated due to age and possible water accumulation. The associated attaching hardware was corroded. The aircraft was being operated in excess of the designed gross weight and with an aft center-of-gravity condition. It was recommended that a

thorough inspection of wooden aircraft structural members be conducted frequently, especially after long periods of storage and/or inactivity.

Aircraft total time-400 hours.

CLASSIC AIRCRAFT CORPORATION

Classic Aircraft Corp.
Model Waco YMF

Propeller Separation
6114

An aircraft accident occurred when the propeller separated from the aircraft.

An investigation disclosed that the probable cause for the propeller separation was failure of the propeller retaining nut (P/N 527). The submitter recommended a life limit be established for the nut and that the retaining nut be inspected by an appropriate means prior to each installation of the propeller.

Part total time not reported.

HOME BUILT

Home Built
Model "One Design"

Wheel Brake
Malfunction
3242

During a landing sequence, the left wheel brake was discovered to be "locked."

This aircraft used a Cleveland master cylinder model 10-5 and had two parking brake levers. The left parking brake lever was found partially engaged which caused the respective wheel brake to lock. The submitter stated that the parking brake levers had not been used and should have been safetied to the open position. It was recommended that if this type system is used, the parking brake function should be deactivated.

Part total time-44 hours.

NIEUPORT

Nieuport
Model 12

Fuel Contamination
2800

While completing maintenance and repairs over a 2-month period, a fuel line was inadvertently left open.

When the repairs and maintenance were completed, the fuel line was assembled without proper inspection. The next flight ended with an accident which was attributed to "unknown contamination" in the fuel filter for the left carburetor. The aircraft used a modified Corvair engine. The submitter recommended that extra effort be made to ensure all plumbing, which is disconnected even for a short time, is properly plugged. If there is any doubt, the system should be purged and checked for proper flow before returning the aircraft to service.

Part total time not reported.

SEAREY

SEAREY
Engine Rotax
Model 912UL

Poor Engine
Performance
8530

This article was submitted by an FAA airworthiness inspector who assisted the owner.

The aircraft maintenance records contained several reports of "rough" engine performance. Previous attempts to correct this problem included replacing the spark plugs, ignition leads, fuel filter, and other components, none of which caused the engine to run properly. Finally, when the spark plugs were again removed from number three cylinder they were found "oil soaked." Further investigation disclosed that the number three cylinder exhaust valve stem seal had failed. It was not explained why this was not detected during previous spark plug changes.

Part total time-32 hours.

SKYBOLT

Skybolt **Low Engine Oil Pressure**
7931

During flight, the engine oil pressure was low (10-30 psi) and erratic. The flight duration was 16 minutes. After landing, the oil pressure was between 0 and 10 psi while taxiing.

The electric pressure transmitter was removed, and a direct reading gauge was installed. A test run of the engine confirmed that the in-flight indications were correct. The pressure regulator and bypass valves were checked and found to be operating normally. This engine (TCM IO470-C) was equipped with a Christen, Model 802 inverted oil valve installed at the supply side of the oil pump. When the inverted oil valve was removed and disassembled, the upper of the two chrome balls (1.125-inch diameter) was found corroded. The submitter speculated the corrosion caused the oil pump to "suck air" when the aircraft was operated right-side-up. The oil pump "cavitated" and failed to supply adequate oil pressure. The lower ball in the valve, unlike the upper, is continuously bathed in oil and was found to be in a like-new condition. The submitter recommended that owners and operators of aerobatic aircraft, equipped with the dual check valve inverted oil system, include disassembly and inspection of the inverted oil valve during annual inspections.

Part total time-200 hours.

PROPELLERS AND POWERPLANTS

TURBOMECA

Turbomeca Model Marbore (Various Models) **Unknown Airworthiness Status**
7200

Turbomeca recently issued Service Letter (SL) 1756/97/MARBORE/2. This SL expresses the manufacturer's concern about the current airworthiness of the referenced engines. (Refer to the SL for specific applicability.)

The concern stems from the military use of a quantity of these engines and their possible return to civil aviation applications. Many of the engines were maintained and operated by approximately 15 different military organizations. In some cases, the life limitations, hours, cycles, and maintenance recording cannot be traced. In addition, configuration control, maintenance, inspection, and repair practices may not have been accomplished in accordance with the manufacturer's technical data. These, as well as other concerns, prompted the manufacturer to issue the referenced SL.

It is of particular concern that the engines, as well as the aircraft they may have been installed in, were sold by the various military organizations for very low prices in an "as is" condition without any sort of warranty. Some of these organizations have required buyers to sign a waiver releasing the seller from any and all liability for defects and/or accidents related to use of these engines.

These engines are not type certificated, and the title was transferred without an airworthiness certification. There are no authorized Turbomeca repair or maintenance facilities for these engines anywhere in North America, nor is there any manufacturer-approved source for spare parts.

If you are considering the purchase of an affected engine, a complete review of SL 1756/97/MARBORE/2 should be accomplished, as well as thorough research of each individual engine.

AIRNOTES

AIRWORTHINESS DIRECTIVES (AD'S) ISSUED IN AUGUST 1997

97-17-03	Ayres S2R Series airplanes: requires inspecting bolt hole areas.
97-16-10	Priority Letter on Rapco filters installed on certain Cessna, Beech, and Piper models.
97-17-08	Beech 1900D airplane: requires inspection of propeller mounting bolts for torque.
97-16-02	Robinson R44 helicopters: requires inspections of belt tension actuator switches.
97-17-06	Bell 214ST helicopters: requires replacement of emergency float inflation solenoid valve.
97-18-02	Hartzell Propeller HC and HA series: requires inspections for cracks in blade shanks and clamps.
97-17-05	Pratt & Whitney Canada PW100 series turboprop engines: requires a visual inspection of two gas generator case drain ports.
97-17-04	Pratt & Whitney JT8D-200 series turbofan engines: requires cleaning front compressor front hubs.
97-05-11R1	AlliedSignal ALF502 and LF507 series turbofan engines: requires inspections of oil system chip detectors.

ALERTS ONLINE

This publication is now available through the FedWorld Bulletin Board System (BBS), via the Internet.

You may directly access the FedWorld BBS at telephone number (703) 321-3339. To access AC 43-16, General Aviation Airworthiness Alerts, through the Internet, use the following address: "http://www.fedworld.gov/ftp.htm". This will open the "FedWorld File Transfer Protocol Search And Retrieve Service" screen. Page down to the heading "Federal Aviation Administration" and select "FAA-ASI". The file names will begin with "ALT", followed by three characters for the month, followed by two digits for the year (e.g. "ALTJUN96.TXT"). The extension "TXT" indicates the file is viewable on the screen and also available for download.

In July 1996, we began using the Adobe Acrobat software program format to upload this monthly publication. Since that time, the "ALT" files now appear with a "PDF" extension, and it is necessary to download the files for viewing. This change was necessary to accommodate inclusion of the illustrations associated with various articles. The Adobe Acrobat Viewer is available for download from the Internet (free of charge) and will allow the files to be read.

Also available at this location are the Service Difficulty Reports (SDR's) for the past 2 months, which may be of interest.

The Regulatory Support Division (AFS-600) has established a "HomePage" on the Internet, through which the same information is available. The Internet address for the AFS-600 "HomePage" is: "http://www.mmac.jccbi.gov/afs/afs600". Also, this address has a large quantity of other information available. There are "hot buttons" to take you to other locations and sites where FAA Flight Standards Service information is available. If problems are encountered, you can "E-mail" us at the following address.

If you wish to contact the staff of this publication, you may do so by any of the means listed below.

Editor: Phil Lomax, AFS-640
Telephone No.: (405) 954-6487
FAX No.: (405) 954-4570
or (405) 954-4748

Internet E mail address:
ga-alerts@mmacmail.jccbi.gov

Mailing Address:
FAA
ATTN: AFS-640 ALERTS
P.O. Box 25082
Oklahoma City, OK 73125-5029

We hope this will allow you to contact us by a means which will be convenient and save some of your time. We welcome the submission of aircraft maintenance information via any form or format. This publication provides an opportunity for you to inform the general aviation community of problems you have encountered as well as bringing them to the attention of those who can resolve these problems. Your participation in the Service Difficulty Program reporting process is vital to ensure accurate maintenance information is available to the general aviation community.

ELECTRONIC AVAILABILITY OF INFORMATION

In light of the previous article, we solicit your input and ideas for the future of this publication. The electronic information media has made available a vast amount of information in a more expedient and efficient manner. We believe the expanded use of this media can bring about the conveyance of safety information in a more efficient and timely manner.

We are currently distributing approximately 28,000 printed copies of this publication each month, and the distribution number continues to increase. The cost for publishing, printing, and mailing this publication has also increased, and there has been a substantial negative impact on our budget allotment.

In an effort to save tax dollars and make better use of the electronic media, we encourage our readers to cancel their printed copy subscription to this publication and use the computer to download the monthly issues. (The instructions for downloading the Alerts were given in the preceding article.) We will be happy to help you if you require further assistance. Some of you may not yet have the equipment necessary to receive the information electronically, and you are welcome to continue receiving it in the printed form.

There have been some efforts to charge an annual subscription fee for this publication. So far, these efforts have not been given much credence. We will make every effort to keep this a free-of-charge publication. However, we need your input and ideas. Would you be willing to pay a nominal subscription charge for this publication?

We appreciate your interest in this publication and the opportunity to serve you. Please offer any comments, questions, or suggestions to us via any of the means listed in the preceding article.

FAA ENFORCEMENT ACTIONS (VIOLATIONS)

This subject usually perks the attention of all within earshot when it is mentioned! In remembering the “olden days,” the mere suggestion that an FAA aviation safety

inspector might be at the airport that day was enough for me to lock my tool box, collect my coat, and take the remainder of the day off.

Now that I'm old and gray and work the other side of the fence, I realize most of my previous fears were unfounded. They were propagated by horror stories which were based on ignorance and became more gruesome each time they were repeated. The term "ignorance" is not intended to be derogatory; in this sense it is used to describe a lack of education.

FAA Order 2150.3A, Compliance and Enforcement Program, contains the guidance and procedures used by FAA inspectors for processing enforcement actions. This document is available to the public from the Government Printing Office (GPO). In accordance with this document, FAA inspectors do not visit you with a preconceived (violation) motive. All FAA inspectors have an enormous work load, and the processing of an enforcement action demands a great deal of time and effort. However, when necessary, all of the assets required will be expended to acquire compliance with Title 14 of the Code of Federal Regulations (14 CFR).

After consideration of the foregoing, one must conclude that if you choose to comply with the rules, you have nothing to fear from the FAA; and you may develop a beneficial trust and openness with your inspector. Through this type of relationship with the FAA and your customers, you will develop a respectable reputation among your peers, your customers, the FAA, and the aviation community. Also, you may find that you rest better at night and have a great feeling of confidence in your work and professional relationship with those you deal with.

On the other hand, if you choose to be less than honest in complying with the rules, you deserve, and most likely will receive, the full fury of the penalties imposed by the rules. These rules were established for the purpose of propagating aviation safety. To quote an old adage, "one should not return to service an aircraft that they would not, along with their spouse and children, fly in."

As an FAA airworthiness inspector, it has been my experience that most of my enforcement time was spent on a very few people and entities. Most aviation maintenance professionals are honest, hard working individuals who possess an outstanding sense of moral values which guide them through all of their endeavors and create trust among those they are associated with.

To all of the aircraft owners and operators, I would say, if you have a bad experience with aircraft maintenance, find a respectable repair shop or individual! However, you should realize that these cases are in a definite minority, and good maintenance facilities are not that hard to find. Some owners and/or operators may have complaints because they sought (and found) "a bargain" annual inspection without regard to the airworthiness of their aircraft. In most of these cases, the owners/operators found exactly what they were looking for. There seems to be a popular misconception among aircraft owners/operators that maintenance personnel are responsible if discrepancies are found (usually during a "ramp check") by an FAA inspector. The regulations make it very clear that owners/operators are responsible for the airworthiness of the aircraft they operate. However, this rule does not relieve maintenance personnel from enforcement action for negligence.

To sum up, it is much better to comply and prevent than to attempt to excuse and repent.

SUSPECTED UNAPPROVED PARTS SEMINAR

As announced in previous editions of the Alerts, the Designee Standardization Branch, AFS-640, will begin presenting the Suspected Unapproved Parts Seminar. The first seminar will be held on January 14, 1998, in

Sacramento, California. The second seminar will be held on January 28, 1998, in Fort Worth, Texas.

Additional seminar dates will be announced in the Alerts, the Designee Update Newsletter, and on the Internet under FedWorld.gov. You may access the FedWorld BBS directly at (703) 321-3339. You may access the Alerts through the Internet, using the Regulatory Support Division, AFS-600, "HomePage" at the following address.

http://www.mmac.jccbi.gov/afs/afs600

The seminar will discuss the following:

1. What is an approved part?
2. How can approved parts be produced?
3. What is a suspected unapproved part?
4. How is a suspected unapproved part reported in accordance with FAA Order 8120.10A, Suspected Unapproved Parts Program, and utilizing FAA Form 8120-11, Suspected Unapproved Parts Notification?

The cost of this 8-hour seminar will be $60. The seminar may be used for the Inspector Authorization (IA) renewal training requirement contained in Title 14 of the Code of Federal Regulations (14 CFR) part 65, section 65.93(a)(4).

The seminar is open to the aviation industry. Anyone wishing to attend may telephone (405) 954-0138. Payment is required in advance by using VISA, MasterCard, or a check.

FAA FORM 8010-4, MALFUNCTION OR DEFECT REPORT

For your convenience, FAA Form 8010-4, Malfunction or Defect Report, will be printed in every issue of this publication.

You may complete the form, fold, staple, and return it to the address printed on the form. (No postage is required.)

SUBSCRIPTION REQUEST FORM

For your convenience, a Subscription Request Form for AC 43-16, General Aviation Airworthiness Alerts, is printed in every issue.

If you wish to be placed on the distribution list, complete the form, and return it, in a stamped envelope, to the address shown on the form.

OMB No. 2120-0003

DEPARTMENT OF TRANSPORTATION
FEDERAL AVIATION ADMINISTRATION

MALFUNCTION OR DEFECT REPORT

OPER. Control No.	
ATA Code	
1. A/C Reg. No.	N-

Enter pertinent data	MANUFACTURER	MODEL/SERIES	SERIAL NUMBER
2. **AIRCRAFT**			
3. **POWERPLANT**			
4. **PROPELLER**			

5. SPECIFIC PART (of component) CAUSING TROUBLE

Part Name	MFG. Model or Part No.	Serial No.	Part/Defect Location.

6. APPLIANCE/COMPONENT (*Assembly that includes part*)

Comp/Appl Name	Manufacturer	Model or Part No.	Serial Number

Part TT	Part TSO	Part Condition	7. Date Sub.

8. Comments (*Describe the malfunction or defect and the circumstances under which it occurred. State probable cause and recommendations to prevent recurrence.*)

Optional Information:

Check a box below, if this report is related to an aircraft

☐ Accident; Date _____ ☐ Incident; Date _____

DISTRICT OFFICE	OPERATOR DESIGNATOR
OTHER	
COMMUTER	
FAA	
UPS	—
AIR TAXI	( )
LESOR	(
OPER.	WRITTEN BY:
REP. AVIA.	TELEPHONE NUMBER:

FAA Form 8010-4 (10-92) SUPERSEDES PREVIOUS EDITIONS

Use this space for continuation of Block 8 (*if required*).

U.S. Department
of Transportation

**Federal Aviation
Administration**

Flight Standards Service
Designee Standardization Branch
P.O. Box 25082
Oklahoma City, OK 73125-5029

AFS-640

Official Business
Penalty for Private Use $300

NO POSTAGE
NECESSARY
IF MAILED
IN THE
UNITED STATES

BUSINESS REPLY MAIL

FIRST CLASS PERMIT NO. 12438 WASHINGTON, D.C.

**Federal Aviation Administration
AFS-640 (Alerts)
P.O. Box 25082
Oklahoma City, OK 73125-5029**

SUBSCRIPTION REQUEST FORM

ADVISORY CIRCULAR (AC) 43-16, GENERAL AVIATION AIRWORTHINESS ALERTS

Please use this request to subscribe to AC 43-16 or to change your address if you are presently on the mailing list. Once your name has been entered, you will continue to receive this publication until you request your name be removed or a copy is returned because of an incorrect address.

Because this mailing list is independent of other FAA mailing lists, it is necessary that you notify us when your address changes. (Our address is on the following subscription request.) If you are presently receiving this publication it is **NOT** necessary to send another subscription request. The following subscription request may be duplicated, as necessary. **TELEPHONE REQUESTS WILL ALSO BE ACCEPTED; THE TELEPHONE NUMBER IS (405) 954-6487. THE FAX NUMBERS ARE: (405) 954-4748 and/or (405) 954-4570.**

AC 43-16 SUBSCRIPTION REQUEST

If you would like to **BEGIN** receiving AC 43-16, or **CHANGE** your address, please complete the following:

PLEASE PRINT INFORMATION LEGIBLY, INCLUDE YOUR ZIP CODE, AND THE DATE OF YOUR REQUEST.

NAME:_____

ADDRESS:_____

_____

_____

ZIP CODE_____

DATE:_____

CIRCLE ONE OF THE FOLLOWING:

1. This is a **NEW** subscription.
2. This is an **ADDRESS CHANGE**.

SEND **ONLY ONE** SUBSCRIPTION REQUEST TO THE FOLLOWING ADDRESS:

FAA, Regulatory Support Division
ATTN: AFS-640 (Phil Lomax)
P.O. Box 25082
Oklahoma City, OK 73125-5029

If you require more than one copy of AC 43-16, it may be reproduced.

U.S.Department
of Transportation

Federal Aviation Administration

Designee Standardization Branch
ATTN: ALERTS, AFS-640
P.O. Box 25082
Oklahoma City, OK 73125-5029

AFS-640

Official Business
Penalty for Private Use $300

BULK MAIL
POSTAGE & FEES PAID
Federal Aviation Administration
PERMIT No. G44